INSTALLATION, OPERATION, MAINTENANCE MANUAL

MHS | CONVEYOR

XP43

XenoPRESSURE® Accumulation Conveyor

XP43 Index

Table of Figures

Table of Tables

Purpose

It is the intent of MHS Conveyor, through this manual, to provide information that acts as a guide in the installation, operation and maintenance of the MHS Conveyor XP43 XenoPRESSURE® Accumulation Conveyor.

This manual describes basic installation practices, assembly arrangements, and preventive maintenance and assists in replacement parts identification.

This service manual is intended for use by personnel who are knowledgeable of installation and safe working practices on conveyor systems.

Not all applications and conditions can be covered; therefore, this manual is to be used ONLY as a guide.

If additional copies of this manual are needed or if you have any question concerning the conveyor please contact your Business Partner or Distributor Services at 231-798-4547 or Fax 231-798-4549.

NOTE
To order replacement parts, a $25 net minimum order is required.

MHS Conveyor Equipment Warranty

MHS Conveyor warrants that the material and workmanship entering into its equipment is merchantable and will be furnished in accordance with the specifications stated.

MHS Conveyor agrees to furnish the purchaser without charge any part proved defective within 2 years from date of shipment or before the equipment has forty-one hundred (4100) hours of running use, whichever period is shorter, provided the purchaser gives MHS Conveyor immediate notice in writing and examination proves the claim that such materials or parts were defective when furnished. For drive components specific to XenoROL® (i.e. Xeno belts, slave Xeno belts, drive spools, standard and speed-up, and spacers), this warranty shall be extended to five years or ten thousand (10,000) hours of running use, whichever period is shorter, provided the conveyors are applied, installed and maintained in accordance with MHS Conveyor published standards. Other than the above, there are no warranties which extend beyond the description on the face hereof. Consequential damages of any sort are wholly excluded.

The liability of MHS Conveyor will be limited to the replacement cost of any defective part. All freight and installation costs relative to any warranted part will be at the expense of the purchaser. Any liability of MHS Conveyor under the warranties specified above is conditioned upon the equipment being installed, handled, operated, and maintained in accordance with the written instructions provided or approved in writing by MHS Conveyor.

The warranties specified above do not cover, and MHS Conveyor makes no warranties which extend to, damage to the equipment due to deterioration or wear occasioned by chemicals, abrasion, corrosion or erosion; Purchaser's misapplication, abuse, alteration, operation or maintenance; abnormal conditions of temperature or dirt; or operation of the equipment above rated capacities or in an otherwise improper manner.

IMPORTANT

All equipment and components not manufactured by MHS Conveyor carry only such warranty as given by the manufacturer thereof, which warranty MHS Conveyor will assign or otherwise make available to Purchaser without recourse to MHS Conveyor, provided that such warranty is assignable or may be made available.

For service on motors, reduction units, electrical components, controls, air or hydraulic cylinders, contact the local authorized sales and service representative of respective manufacturer. If none is available in your locality, contact the MHS Conveyor representative. MHS Conveyor will not be responsible for units that have been tampered with or disassembled by anyone other than the authorized representative of the respective manufacturer.

THERE ARE NO WARRANTIES, EXPRESSED OR IMPLIED, INCLUDING, BUT NOT LIMITED TO, WARRANTIES OF MERCHANTABILITY OR FITNESS FOR A PARTICULAR PURPOSE, EXTENDING BEYOND THOSE SET FORTH IN THIS STATEMENT OF WARRANTY.

Rev 08/22/2011

Warnings and Safety Instructions

Failure to follow the instructions and cautions throughout this book, and warning labels on the conveyor, may result in injury to personnel or damage to the equipment.

Your MHS Conveyor is powered by a motor and can be stopped only by turning off electrical power to the motor. As with all powered machinery, the drive-related components – including sprockets, chains, shafts, universal joints and pneumatic devices – can be dangerous. We have installed or provided guards to prevent accidental contact with these parts, along with warning labels to identify the hazards.

Special attention must be paid to the following areas of this manual:

WARNING	
	• Indicates a potentially hazardous situation which, if not avoided, could result in death or serious injury.

CAUTION
• Indicates a situation which, if not avoided, could result in property damage.

NOTE
This is where you will be notified of helpful information.

⚠ WARNING

- After maintenance, REPLACE guards immediately.
- Keep ALL warning labels clean and clear of any obstructions.
- Never remove, deface or paint over WARNING or CAUTION labels. Any damaged label will be replaced by MHS Conveyor at no cost by contacting Lifetime Services.
- It is very important to instruct personnel in proper conveyor use including the location and function of all controls.
- Special emphasis must be given to emergency stop procedures.
- It is important to establish work procedures and access areas which do not require any part of a person to be under the conveyor.
- It should be required that long hair is covered by caps or hair nets.
- Loose clothing, long hair and jewelry must be kept away from moving equipment.
- Maintain enough clearance on each side of all conveyor units for safe adjustment and maintenance of all components.
- Provide crossovers or gates at sufficient intervals where needed to eliminate the temptation for personnel to climb over or under any conveyor.
- Walking or riding on a moving conveyor must be prohibited.
- Before performing maintenance on the conveyor, make sure the start-up controls are locked out and cannot be turned on by any person other than the one performing the maintenance.
- If more than one crew member is working on the conveyor, EACH CREW MEMBER MUST HAVE A LOCK ON THE POWER LOCKOUT.
- All pneumatic devices must be de-energized and air removed to prevent accidental cycling of the device while performing general maintenance.
- Make sure all personnel are clear of all conveyor equipment before restarting the system.

WARNING

- Before servicing or performing any work in the motor control panel, disconnect and lock out the main incoming service. If only the panel disconnect is off, the incoming side will still be hot.

CEMA Safety Label Placement Guidelines

CEMA Safety Labels — *Placement Guidelines*

Product: Unit Handling Equipment

Equipment: Lineshaft Conveyors

General warning to personnel that lineshaft conveyors use a rotating shaft which may be hazardous if hair or loose clothing becomes entangled around the lineshaft. Also used on any other conveyors where the exposed shaft may create similarly hazardous conditions.

To be placed along both sides of these conveyors since these conveyors provide surfaces and profiles attractive, but hazardous, for climbing, sitting, walking, or riding.

To be placed on removable guards to warn that operation of the machinery with guards removed would expose chains, belts, gears, shafts, pulleys, couplings, etc. which create hazards.

"A"

SPACE UP TO A MAXIMUM OF 20 FT. CENTERS (BOTH SIDES)

"B"

SPACE UP TO A MAXIMUM OF 20 FT. CENTERS (BOTH SIDES)

"C"

LOCATE AT DRIVE GUARDS AND CHAIN/BELT GUARDS

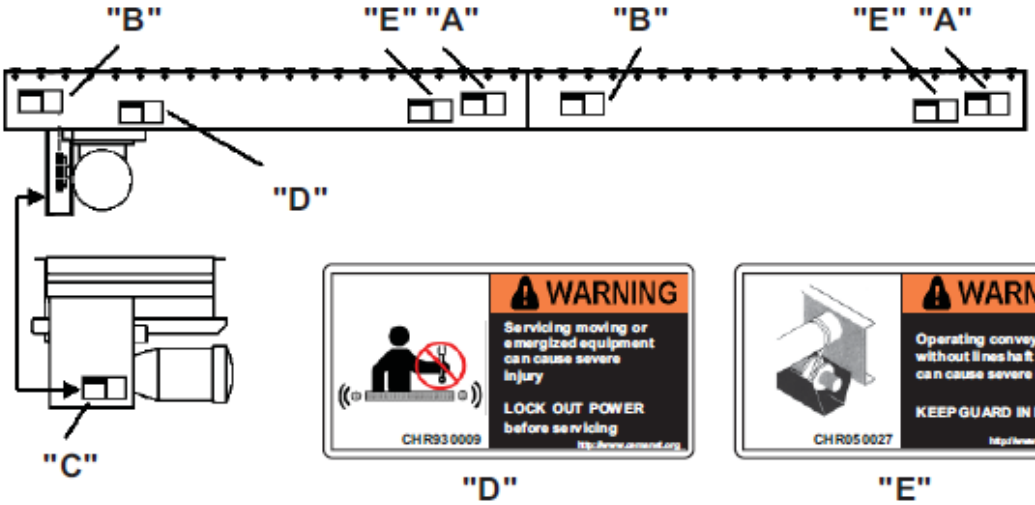

"D"

LOCATE ON DRIVE SECTION (BOTH SIDES)

General purpose label to warn maintenance personnel that conveyors should be shut off and locked out prior to servicing; Examples: drives, take-ups, lubrication points which require guard removal.

"E"

LOCATE NEAR LINESHAFT GUARDS (*BUT NOT ON GUARD*)

General warning to personnel, used in conjunction with label A, to alert them that an exposed lineshaft may create a hazard, and that a guard was supplied that should be in place while the equipment is operated. If operated without the guard in place, the mechanism can grab body members, clothing, and hair.

UH - 7

Package Conveyors

POST IN PROMINENT AREA

Introduction

XP43 uses standard MHS Conveyor CRUZcontrol® to accumulate and release product. Pneumatic brakes are employed to stop the line-shaft zones as the products accumulate. It is critical that the accumulation zones are always longer than the longest product.

XP43 is non-contact accumulator when used in the basic release logic module mode. If the conveyor is switched to the progressive release mode, the product may bump and touch, but will not coast. This feature makes these conveyors ideal for work in process applications where sensitive products are being handled. In distribution warehousing applications, it is important to remember that XP43 will not dense pack mixed size product.

CRUZcontrol® Description of Operation

Basic Logic

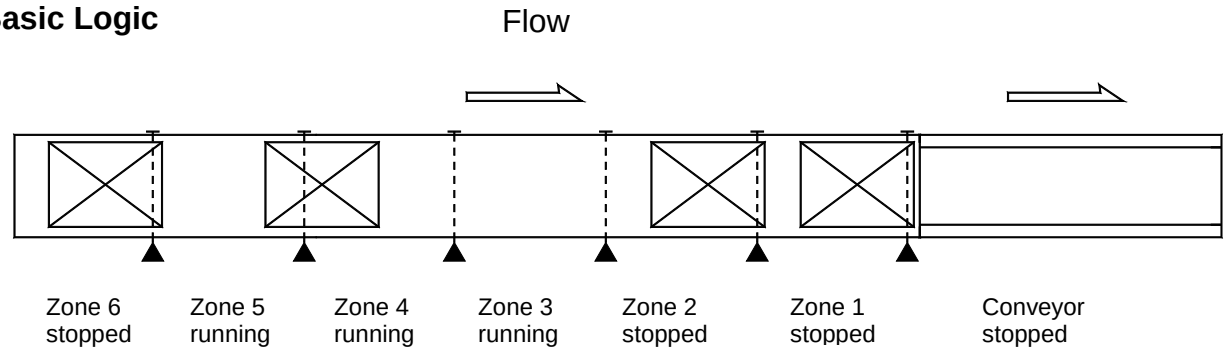

Basic Logic functions such that when any two successive photoelectric sensors are blocked, the second zone upstream is set to accumulate. In the above example, the discharge zone, Zone 1, is shown stopped, signifying that release from the zone is being inhibited and the Zone 1 sensor is blocked. Zone 1 sensor blocked and Zone 2 sensor blocked results in Zone 2 being stopped. Zone 3 and Zone 4 sensors are not blocked, and the zones are running. Zone 5 sensor is blocked, but the zone is running because the Zone 4 sensor is not blocked. Zone 6 is stopped because both Zone 5 and Zone 6 sensors are blocked.

Note that with Basic Logic products being transported on the conveyor are separated by a gap of at least one zone length. This will reduce the transportation throughput capacity of the conveyor. The rate at which product is introduced onto an accumulation conveyor of this type must not exceed the transportation capacity of the conveyor.

Discharge from Basic Logic

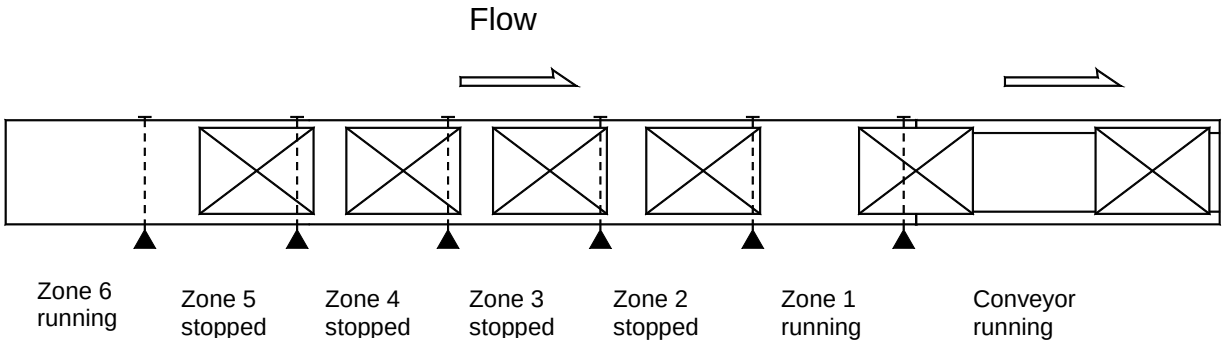

A Singulation Release signal given to the Zone 1 Logic Assembly releases product from that zone. As released product clears a photoelectric sensor, the product stopped at the next upstream zone is released. This will create a one-zone length gap between all released products assuming conveyor speeds (accumulation conveyor and downstream conveyor) are identical.

If the line is set to Slug Release (Train Release), all affected zones will run, resulting in the release of product with little or no gaps. This overrides the normal Basic Logic function.

All product movement as described for transportation, accumulation, and discharge is based on zone lengths, meaning only one product is in each zone. If more than one product should occupy a single zone, which could occur with small products, they will usually move together or stop together, or they could eventually become separated into different zones. This is true for both Basic Logic and Progressive Logic.

Progressive Logic

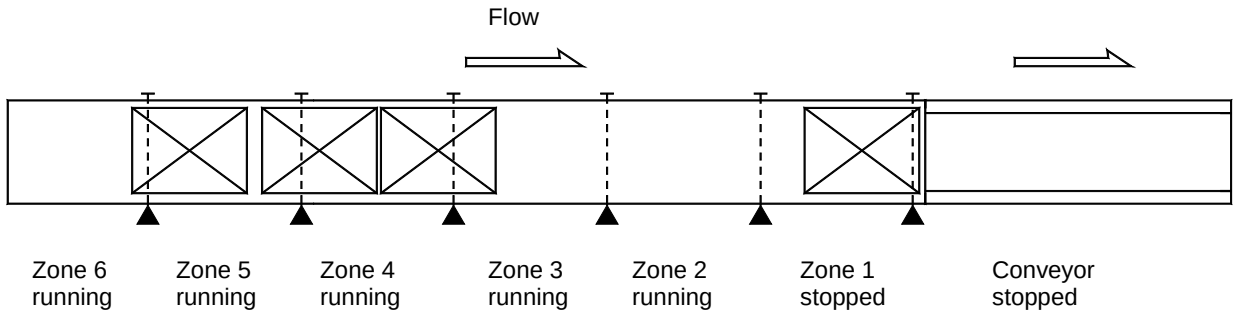

Progressive Logic functions such that no zones are set to accumulate unless all downstream zones hold accumulated product and the photoelectric sensors are blocked. In the above example, the discharge zone, Zone 1, is shown stopped which is a result of the release from the zone being inhibited and the Zone 1 sensor being blocked. Zone 2 sensor not being blocked results in all upstream zones, Zone 2 through Zone 6, running.

Note that with Progressive Logic products being transported on the conveyor can remain tightly packed, without any gaps being created.

Discharge from Progressive Logic

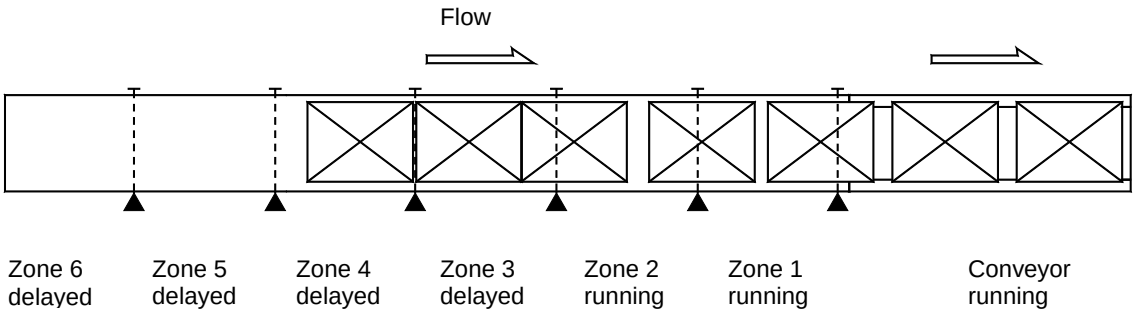

A Singulation Release signal given to the Zone 1 Logic Assembly releases product from that zone. Each successive upstream zone will also begin releasing product.

If the line is set to Slug Release (Train Release), all affected zones will run, resulting in the release of product with little or no gaps. This overrides the normal Progressive Logic function.

Cautions

CRUZcontrol Logic Assemblies are designed to be fail-safe. A loss of module power, a disconnected or severed cable, or a dirty or failed photoelectric sensor will all result in the stopping of a zone, initiating accumulation beginning from the affected zone.

With Progressive Logic, failure of a Logic Assembly to function properly could possibly result in product accumulating with zones not stopping as required. While this should be unlikely due to the fail-safe nature of the Logic Assembly, a product jam preventing product from blocking a zone sensor would also result in a zone not functioning. The effects of such a failure should be considered. This type of failure could result in excessive line pressure, eventually causing product to push through the discharge zone of the conveyor. If needed, jam detection sensors could be used to minimize the effects of such a failure.

CRUZcontrol provides the ability for slug release. If the controlled conveyor is set to slug release, all affected zones will run immediately, regardless of downstream conditions, resulting in the immediate release of product with little or no gaps. Both the Basic and Progressive Logic mode release at the maximum possible discharge rate when slug release is enabled. Slug release does create a situation where a product jam will result in excessive line pressure buildup. If the slug release feature is used, it should be used with caution, and for a limited number of successive accumulation zones.

Configuration Options

Basic Logic and Progressive Logic can be intermixed. An example of where this would be advantageous would be the placing of one Basic Logic conveyor bed at the end of a long length of Progressive Logic conveyor. The Progressive Logic would allow the conveyor to receive and transport product at higher throughput rates, while the Basic Logic discharge section would singulate product being released.

Receiving and Site Preparation

General

XP43 zero-pressure conveyor is shipped in subassemblies. These subassemblies are packaged to guard against damage in shipment when handled properly.

Examination immediately following unloading will show if any damage was caused during shipment. If damage is evident, claims for recovery of expenses to repair damage or replace components must be made against the carrier immediately. While unloading, a check must be made against the Bill of Lading, or other packing lists provided, to confirm full receipt of listed items.

CAUTION

- TAKE CARE DURING THE REMOVAL OF EQUIPMENT FROM THE CARRIER. Remove small items and boxes first. Pull and lift only on the skid, not on the frame, crossmember or any part of the equipment. Be sure the skid is free of other materials which may be on top of or against the side of the skid to be removed.

Preparation of Site

After the conveyor is received, move it to the installation site or designated dry storage area as soon as possible. Clean up all packing material immediately before parts get lost in it. Loose parts should remain in the shipping boxes until needed.

Prior to starting assembly of the conveyor, carefully check the installation path to be sure there are no obstructions that will cause interference. Check for access along the path needed to bring in bed sections and components closest to the point where they are needed. It is often necessary to give the area along the system path a general cleanup to improve installation efficiency, access and accuracy.

Parts Inventory and Identification

Each subassembly is shipped completely assembled except typical loose parts, which are in boxes with the subassemblies. Drive assemblies are shipped mounted to the drive bed frame. Segregate the conveyor subassemblies by types for inventory and ease of locating during installation.

An identification label is attached to the outside of one side channel, close to one end of each conveyor bed and on all drive packages.

Typical identification labels.

This label contains: assembler's employee #, item number, description, job number, construction order # (if specified), tag number (if specified), date of manufacture, M #, and Segment #.
On supports, the tag is located on the bottom side of the foot.
On special devices it is located on a convenient flat surface that is not offensive to the appearance of the equipment but is still accessible for viewing. These numbers can be cross-referenced against the packing list.

Loose parts are boxed and shipped separately. You should have all conveyor sections and supports for a particular conveyor prior to installation. It is cost-effective to identify and procure any missing parts before they are needed for assembly. Small items like nuts and bolts are weigh-counted and packaged by size and type.

WARNING	
	• The Installation Supervisor must be experienced with conveyor and qualified in the mechanics of the equipment and enforce safe working procedures for the protection of the crew, customer, and customer's property.

Dimensional Reference Points

The path of each conveyor in the system is determined by establishing a reference point at each end. The center line of the conveyor is established and a chalk line is snapped between these points.

Conveyors should be installed with the center line of the bed matching the center line of the conveyor path within ±1/16" of true center. Locate and mark the center of the crossmembers at each end of the conveyor. Use a plumb line or other acceptable means to ensure accuracy to the chalk line.

Always carry out a thorough check for any obstructions such as building columns, manholes, etc. It may be necessary to reroute the conveyor to avoid the obstruction. In this case it would be advisable to begin installation at this point, using the obstruction as a reference point (Datum), and install the sections in either direction as required.

All conveyor sections must be checked for squareness prior to installation as "racking" or being knocked out of square may have occurred during shipping and handling.

Elevations

All conveyors should be installed in accordance with the elevations shown on the drawings. In addition, all conveyors must be level across the frame width and length (if horizontal). Leveling of the frames is best done using a rotating laser level or a builder's level.

After the first elevation is established at a critical point, the elevation of all other points shall be relative to this first point. Normal practice is to dimension the layout and measure elevations from the floor at each point of support.

As the conveyor system proceeds onto another floor or into another building or room, a new elevation will be measured from the floor at that point. This new elevation will then become the reference for subsequent elevations.

When installing an overhead system, the first elevation is measured from the floor and becomes the reference elevation point until a change in elevation is shown on the layout. Any new elevation is also measured from the floor and becomes the new reference point. The process is repeated each time an elevation change occurs.

CAUTION
• Consult the building architect or a structural engineer regarding ceiling loading or structural limitations of the building if any conveyor is ceiling-hung.

Component Orientation

Using your conveyor system layout drawing and the numbers on the I.D. tags on each component, position and orient the conveyor sections. You must know:

- The direction of product flow (RH/LH)
- The elevation height (TOR) (top of roller)
- How the drive is positioned (RH/LH)
- Charge and discharge end beds

Bed with product flow direction label.

NOTE
Line-shaft away from you. Product moving RIGHT – RH flow. Product moving LEFT – LH flow.

IMPORTANT! Do not make alterations to the equipment without consulting with user's representative and MHS Conveyor. Unauthorized modifications to the equipment may impair its function, create a hazardous condition, affect its useful life and/or void the warranty.

Basics of XP43 Installation

General

Bed sections will be stacked on pallets for shipping and received as shown.

XP43 conveyor may be installed using any of the supporting arrangements described under Support Arrangements in this manual. As each bed is installed in the system, level the conveyor from side to side using a bubble level on the roller at each support. The bubble location should be within the level indicator lines of the level. The center line of the conveyor should not bow to the right or left more than 1/8” in either direction from a center line drawn between the centers of the conveyor end assemblies.

A simple way to check this is to tie a nylon string around the center of the end roller, pull it taut, and tie it to the center of the roller at the opposite end. Put a wood spacer under the string at each end so it does not rest on the rollers. With the taut string centered on each end and suspended above the rollers, check the center of the rollers at each support relative to the string and adjust accordingly. (Note that this must be done after side-to-side leveling of the conveyor at each support.)

When joining bed frames it is important to align the rollers and line-shaft. Care must be taken to make sure the rollers are level (carrying surfaces) from bed to bed.

All bed frames should be checked for squareness. To check, measure diagonally from corner to corner. Measure the opposite corners in the same manner. If the bed is square, the two measurements will be the same within 1/16".

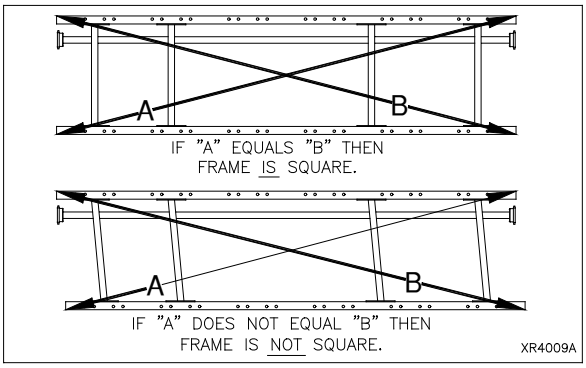

NOTE

Conveyor frames must always be installed in a straight line from end to end. After a number of sections have been installed to the chalk line and leveled, check the alignment of each line-shaft assembly. As the conveyor sections are bolted together, the coupler sprocket alignment may require adjusting. The edge of the 1" diameter line-shaft must be 2" from the frame channel as an initial reference point (a business card can be used for measuring this 2”).

Coupler Alignment

- Check the alignment of each pair of coupler sprockets.
- Loosen one coupler sprocket and slide it against the other.
- If the coupler sprockets do not align vertically, adjust the following: Loosen the crossmember mounting bolts of two crossmembers in each bed and adjust the height of the crossmember within the limits of the mounting holes.
- Retighten all 3/8-16 bearing bolts to 23 ft-lbs and 5/16-18 set screws to 13 ft-lbs.
- Wrap Delrin coupling chain around both coupler sprockets.
- Install pin and tighten all set screws to 13 ft-lbs.
- Adjust the line-shaft for zero gap between sprocket faces and exact mating of teeth.
- To align horizontally, loosen the bearings on two crossmembers on each bed.
- Align the coupler sprockets with a gap of 9/32" between sprockets after loosening both set screws in one sprocket.
- Coupler misalignment outside these specifications may cause the connecting pins to loosen and/or cracks will appear in the chain links.
- NEVER REPLACE A BROKEN COUPLER CHAIN WITHOUT ALIGNING THE SPROCKETS.

Coupler Chains

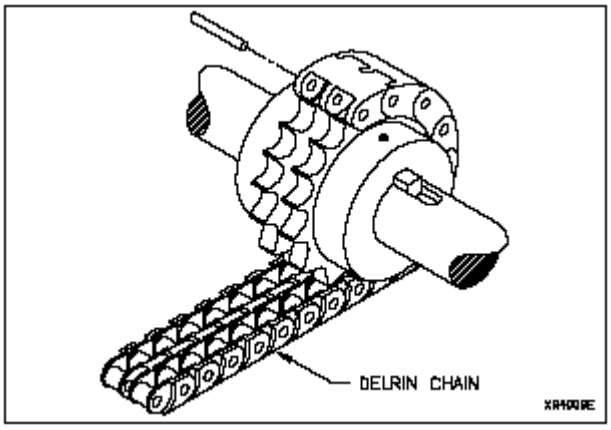

When the line-shafts and coupler sprockets are properly aligned, the coupler chain will easily wrap around the sprockets to complete the coupling. If the chain does not wrap easily, stop and recheck alignment and spacing. The more accurate the coupler alignment, the longer the service life of the Delrin chain.

Connecting the coupler chain is accomplished by inserting the serrated pin through the side of the double wide Delrin coupler chain. Care must be exercised when installing the press fit pin to ensure the side link opposite the insertion side is not damaged. Support the chain link by using a channel lock pliers or similar tool. Start the coupler chain wrap in a position providing the greatest access to the connecting point.

TIP! The chain link can be supported by using a channel lock adjustable pliers and squeezing the pin in. This also requires less clearance than using a small hammer and tapping the pin in.

Carefully note from the system layout drawings, any bed joint locations which are not to be coupled due to the ending of that conveyor drive. Those coupler sprockets must be removed BEFORE the beds are installed. This will also prevent the mistake of putting on all coupler chains before realizing which joints are not to be coupled.

Coupler chains transmit the torque load of that portion of the conveyor located between the coupler and the termination of that conveyor. The highest coupler load will be those located at each end of the drive bed. Excess load will cause premature failure. The maximum load is

based on horsepower required torque at a given speed, i.e. 1 HP maximum at 60 FPM or 1.9 at 90 FPM. Horsepower allowed is directly proportional to the speed up or down.

A rule of thumb would be to locate the drive bed as close to the center of the conveyor as possible to center the torque load on the Delrin coupling chains. This is more important at slow speeds than at high speeds. At 90 FPM and above the drive location is not as critical.

The substitution of steel coupler chain is not recommended on the standard coupler sprocket. The use of steel chain on standard coupler sprockets will void the warranty. Steel coupler chain also requires periodic lubrication.

Line-shaft Terminations

WARNING

- Remove any coupler sprocket which is not coupled to an adjacent sprocket. These sprockets must be removed BEFORE the bed is installed. The white line-shaft safety caps must be installed in place of the sprockets to cover the end of the keyway.

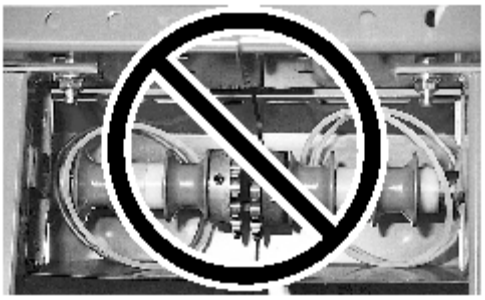

Never leave unused sprockets on line-shaft.

WARNING

- At the termination of the XenoROL® line-shaft-driven conveyor(s), the open end of the line-shaft guard must be covered with the end cover kit provided with each drive bed or in the loose parts. This kit includes instructions, mounting hardware and 1" bore set collar. The set collar replaces the unused coupler sprocket. This end cover must be used at all exposed ends including XenoROL terminations abutting other types of conveyor or machinery.

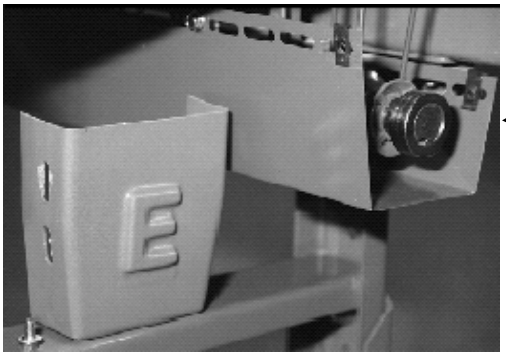

Set collar

End cover
in position

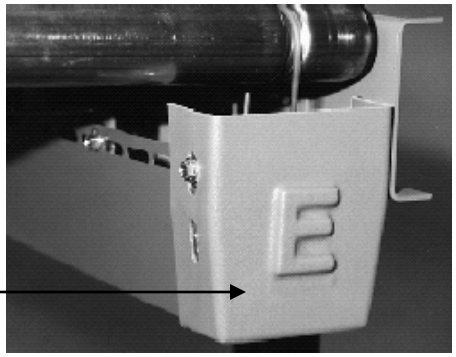

WARNING

- Safety caps are required on ends of all adjoining line-shaft conveyor beds not coupled together.

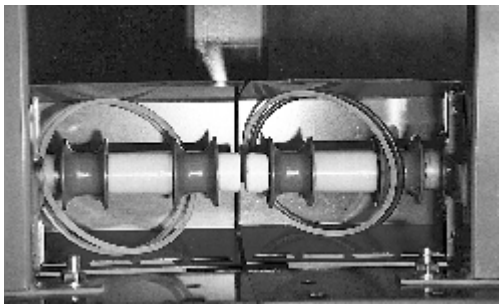

At joint between adjacent drive units, remove sprockets and add white plastic safety caps.

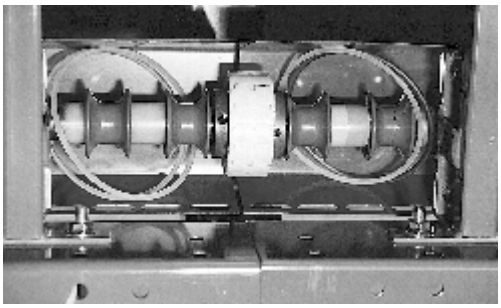

When continuing drive, install coupler chain per instructions.

Supporting Arrangements

Floor Supports

Install bolts used to attach the standhead to the frame so that the nuts are on the bottom. Standhead bolts should be left finger tight while the conveyor is being assembled and aligned.

Floor supports are ordered by nominal height range, which is the dimension from the floor to top of the support. Conveyor elevations are shown on the layout by top-of-roller elevations. This difference must be recognized when setting the support elevations. XP43 conveyor is 6 5/16” from top-of-support to top-of-rollers with a 7 1/2” deep channel. (Rollers mounted low in frame.)

It is important that conveyor frames be installed level. Floor supports will accommodate normal irregularities in the floor surface. Adjustment for elevation in floor supports is accomplished with metal-on-metal bolt clamping force. To achieve the support’s stated load rating, it is necessary to tighten the elevation adjustment bolts (3/8" diameter) to 23 ft-lbs of torque.

Supports should always be installed in the vertical position, and any variations due to conveyor pitch or floor slope will be compensated for in the pivoting standhead of the support.

Anchoring

Anchoring in concrete floors is accomplished by drilling into the floor and inserting the suitable anchor bolt. The hole diameter and depth must be in accordance with the anchor bolt manufacturer’s instructions.

Anchor intermediate floor supports with two anchor bolts, one through each support foot plate using minimum 3/8" diameter anchor bolts. For floor supports over 5’ high or when supporting drives, use 1/2" diameter anchor bolts. Stagger anchors from front hole on one side to rear hole on opposite side. Anchor bolts for equipment subject to impact loads should be a minimum of 1/2" diameter.

90° curve with true taper rollers.
A single support leg is located on the center of the outside channel.

WARNING

- Place a bolt through the frame and support immediately with finger tight nut. This will prevent the frame from falling off the support, if bumped, and causing injury.

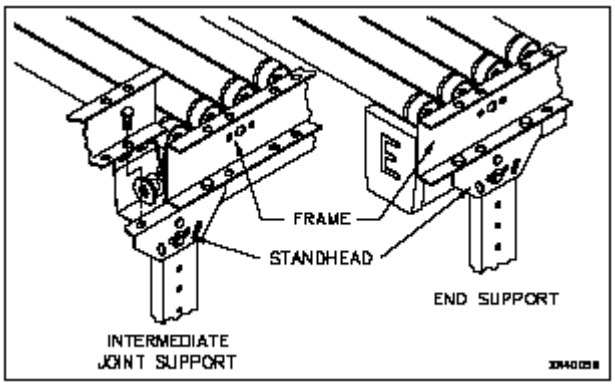

Curve Support Points

The curve illustration indicates proper support locations for curves of various degrees and widths. The dots illustrate the support connecting point to the conveyor. The dark line between dots indicates a full support with crossmember or ceiling hanger cross tube. A single dot on the outside center of the curve indicates only the outer curve rail is supported with either a ceiling hanger drop at that point or a single leg floor support.

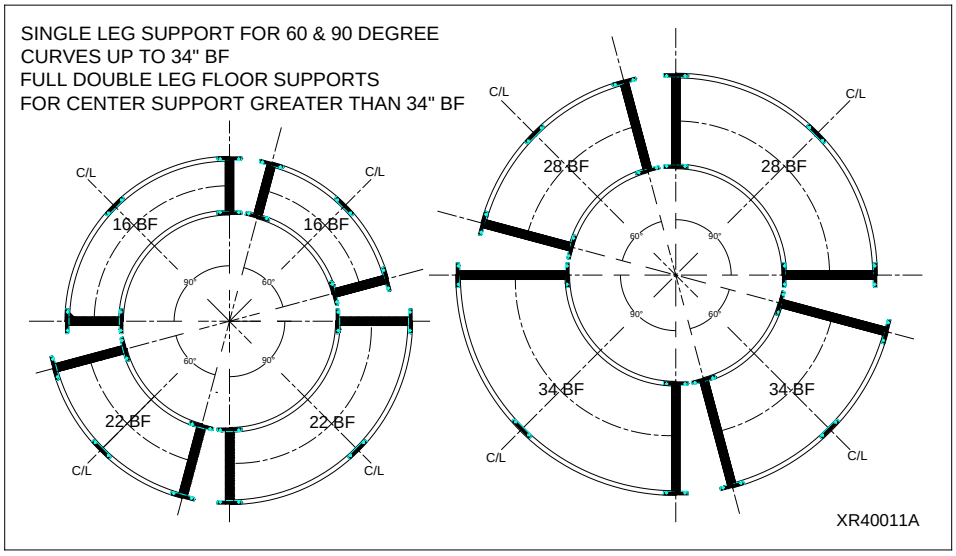

If a full width support with crossmember is supplied where only a dot is indicated, use the full support. The illustration below is minimum supporting arrangement.

Knee Braces

Stability along the conveyor length is achieved with knee braces. Braces resist stresses caused by direction of product flow, drives, stops and starts. Every support does not require bracing. Braces are used at the ends of straight runs and approximately every 30' in between. Braces should be located toward the discharge end (DOWNSTREAM) side putting them in tension. Starting the conveyor puts opposite stresses on the supports, which is resisted by installing a brace near the drive toward the receiving end (UPSTREAM).

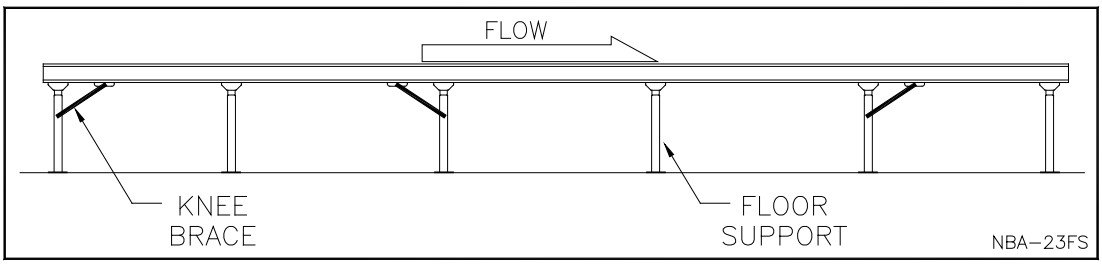

For best results the angle between the knee brace and frame should not exceed 45 degrees, or be less than 30 degrees. On short supports where a small angle results, the knee brace may need to be shortened.

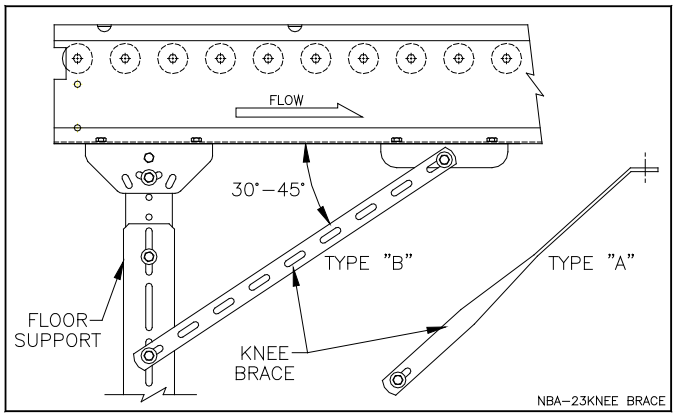

Type "C" braces use two type "B" braces overlapped and bolted together for extended length when conveyor height is 48" or more.

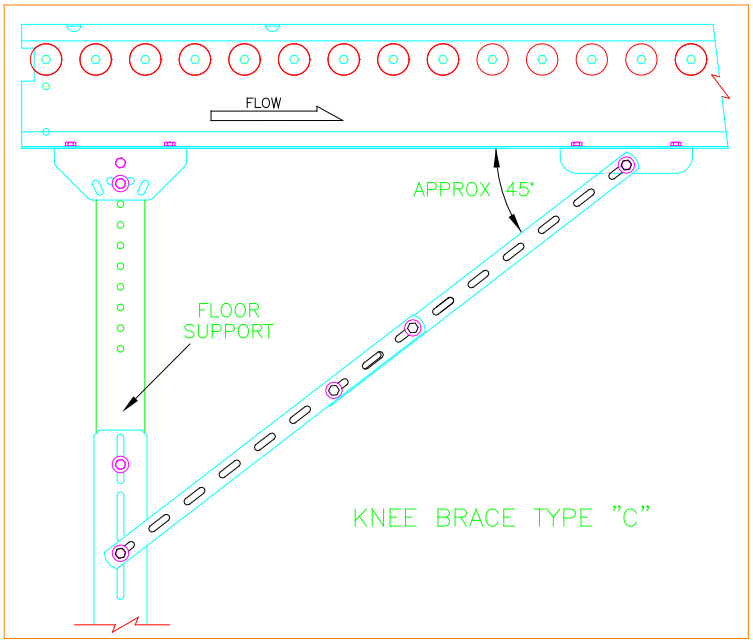

CRUZ®channel to XenoROL® Channel Connections

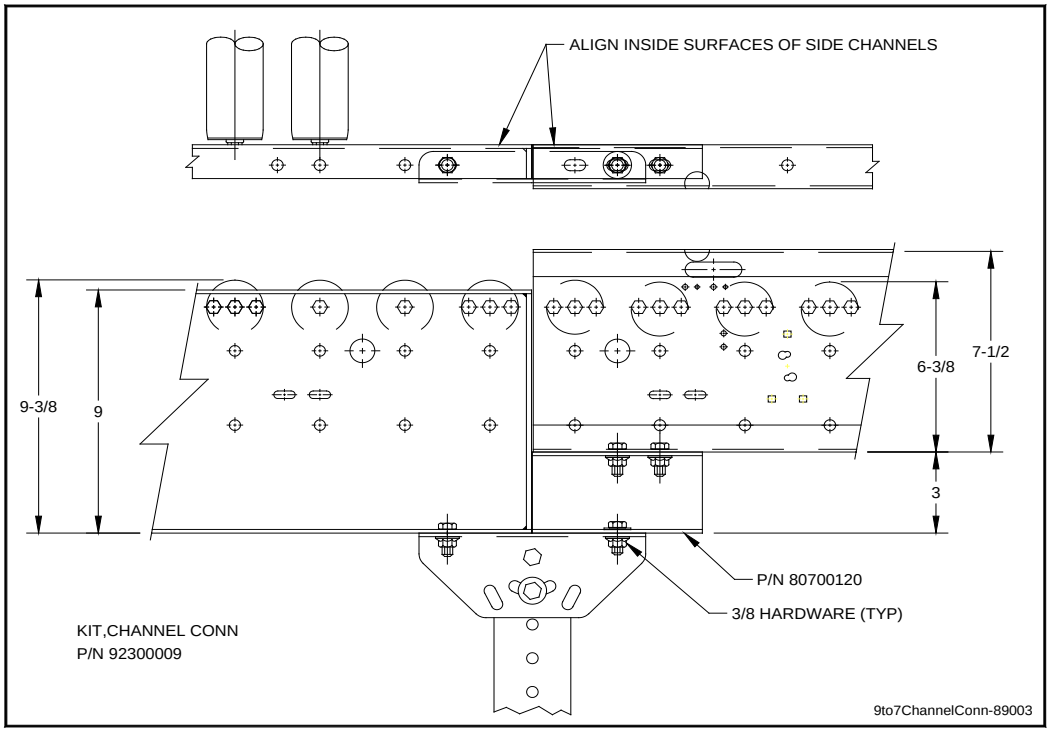

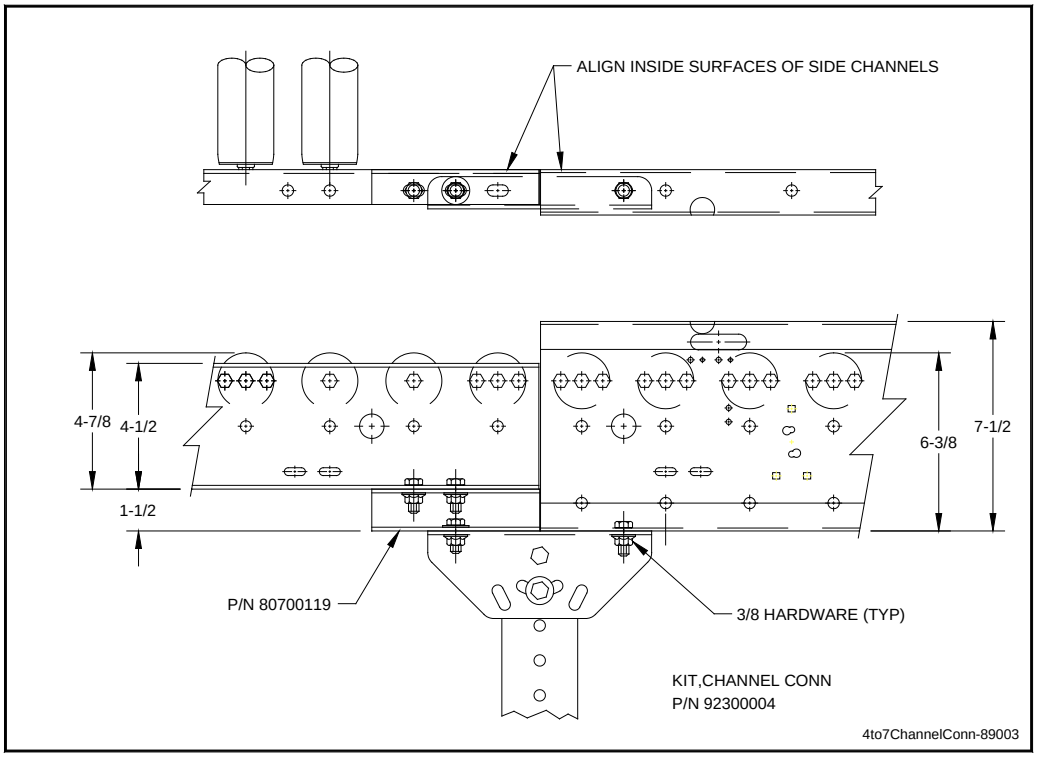

Ceiling Hangers

WARNING

- Consult the building architect or a structural engineer regarding ceiling loading or structural limitations of the building for sizing header steel.

Cross pipes, V-brackets and flat strap connectors are provided with ceiling hangers. Threaded 3/4" rod and attaching nuts are available as an option. Bed connectors are recommended with all ceiling hanger applications.

If hanger uprights are field fabricated, they should be a minimum of 1-1/2" x 1-1/2" x 3/16" angle.

Drop rods and nuts are optional. The extension nut is welded into the angle hanger upright during installation.

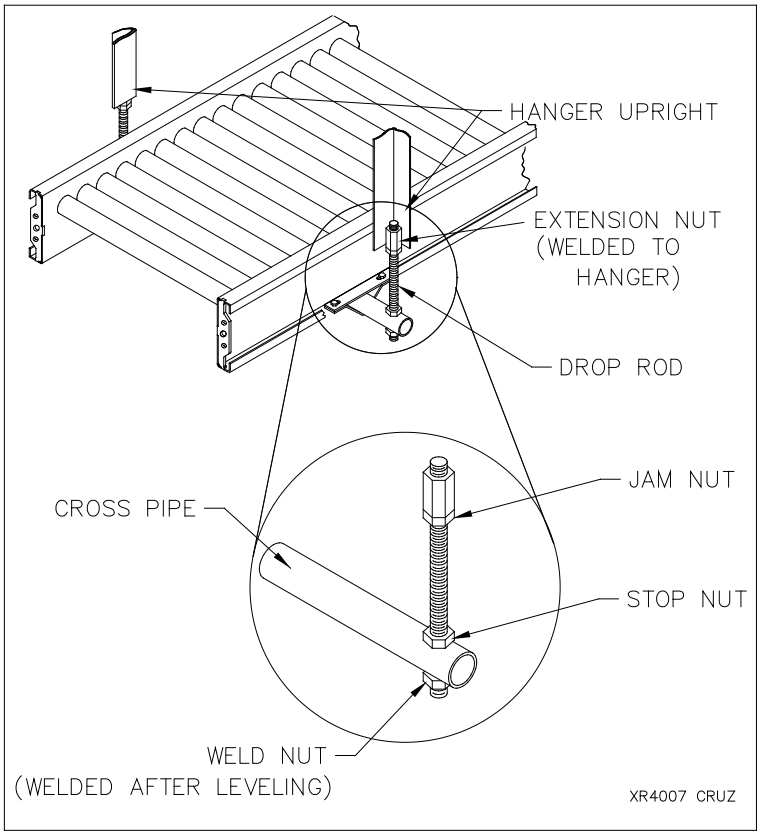

WARNING

- Consult your distributor or a structural engineer to determine what size hangers should be used to support your maximum anticipated load.

After hanger uprights are installed and the heavy extension nuts welded to angle hangers, thread the drop rods into the extension nuts. Thread the jam nuts and stop nuts on the drop rods far enough up the rods to allow installation and adjustment of the cross pipe.

While still on the floor, loosely attach cross pipe, V-brackets, flat strap connectors (or channel spacer) and bed connector to one end of a bed section. Hoist the bed section between the drop rods guiding the rods through the mounting holes in the cross pipe. Thread the weld nuts

on the drop rods to support the bed. Weld the weld nuts to the drop rods to prevent loosening. Hoist the next bed section into place and connect it using the flat strap connectors and V-brackets. Level the bed lengthwise and side to side by threading the drop rods up or down by using a wrench on the weld nuts. Tighten the jam nuts against the extension nuts and the stop nuts against the cross pipe. Continue for the length of the conveyor.

Anchoring Ceiling Hangers

Open Building Steel

The following references are from the American Institute for Steel Construction manual (AISC).

- Welding of auxiliary steel (stringers or headers) to building steel is prohibited.
- Drilling and bolting to building steel is not recommended and will be done only with the customer's written permission.
- Clamping of stringers or headers to building trusses will normally be done only at panel points. Specific customer permission and load calculations by a qualified engineer are necessary to safely clamp between panel points.
- Headers when used for short spans, such as between roof purlins, will be securely clamped to building steel. Stringers, when used between headers, may be welded or bolted to the headers directly or with suitable angle clips.

Concrete Ceilings

Accomplish anchoring by drilling into the concrete ceiling and inserting suitable anchor bolts. The hole diameter and depth must be in accordance with the lag bolt manufacturer's instructions. Anchor each hanger with four bolts (two per upright) minimum size 1/2" diameter. Consult your distributor or structural engineer to determine your needs.

WARNING	
	• Do not use explosive type anchors.

For heavier concentrated loads like drives or points where movement or vibration can occur, use 5/8" diameter through bolts with backup plates. If this is not permissible or possible, then header steel must be installed using several anchor bolts to spread the load.

Wood Joists/Beams

Hangers may be attached directly to the joists providing the load rating of the building will permit. Attach hangers to the vertical side of the joist in two places, one above the other, on each hanger upright. Anchoring is accomplished by drilling through the joist in the upper position and using a 1/2" diameter through bolt with a backup plate or heavy washer. A 1/2" diameter lag screw may be used in the lower position.

When a header is required to support the load, it must bridge across two or more joists. This header will be attached to each joist in the manner specified in paragraph above. Hanger uprights should then be bolted or welded securely to the headers.

NOTE

Consult a structural engineer to determine which method should be used for your load requirements.

Concrete/Masonry Walls

Equipment may be supported from concrete walls through use of suitable bolts and anchors or by bolting through the wall if the condition of the wall or load dictates it. A 1/2" diameter through bolt should be used with a backing plate.

Ceiling-hung conveyor header steel should be installed well ahead of the conveyor frame installation to minimize congestion.

Sway Bracing (ceiling hanger)

1. Sway bracing should be a minimum of 1-1/2" x 1-1/2" x 3/16" angle.
2. Sway bracing is secured to the hanger upright near the conveyor support and extended upward at an angle of approximately 30 degrees from the hanger upright. The sway brace angle should not be over 45 degrees to the upright. When hangers are installed adjacent to building columns, a horizontal brace may be installed securely to the column.
3. Hanger uprights over 12’-0" in length must have horizontal bridging angles connected between the upright and the sway brace at approximately the halfway point.
4. Sway bracing should be installed on every third hanger (maximum of 30’-0" centers).
5. If sway bracing cannot be placed on the outside of the uprights, alternate X-bracing between every other pair of uprights.
6. Additional bracing should be used:
    a. Before and after curves
    b. At drives
    c. At product diverting points

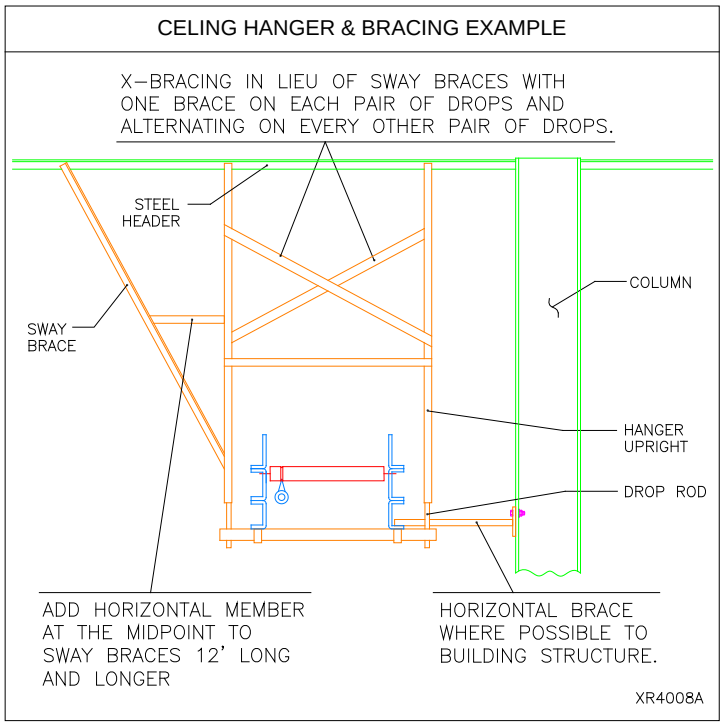

CAUTION

- Before adding X-braces between ceiling drops, check for adequate product clearance.

Diagonal Sway Brace (floor support)

Floor support sway bracing consists of one 1-1/2" x 1-1/2" x 3/16" structural angle and mounting hardware.

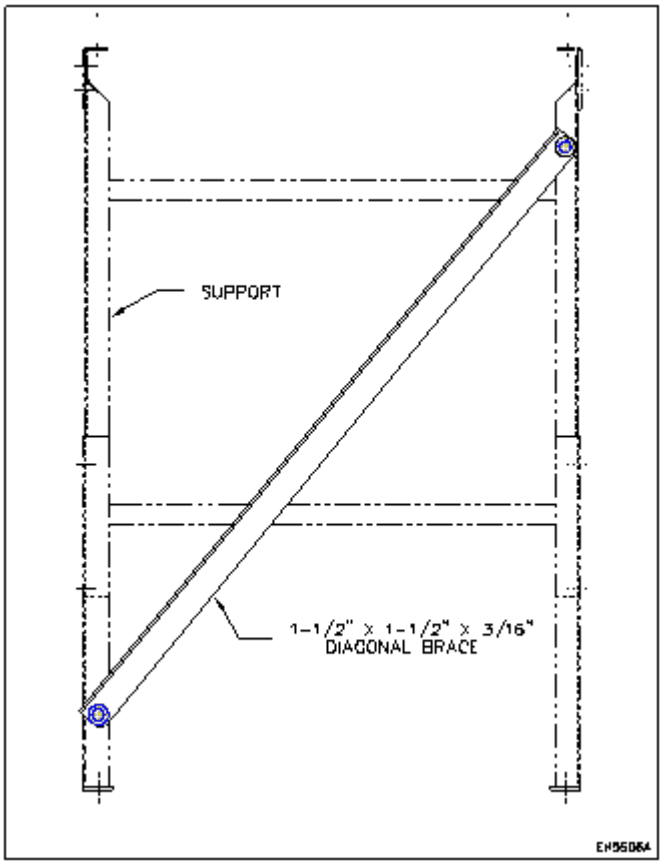

Application: Due to natural side to side movement of line-shaft conveyor, a diagonal sway brace has been designed to reduce side movement in the standard floor support. Side movement is most prevalent in long straight lines which are not side braced by adjoining conveyors, curves, etc. or where they cannot be braced to columns, machinery, or other conveyors. This is more noticeable when the conveyor elevation is greater than its width. One brace can be mounted to every third or fourth support diagonally across the support with the low end on the opposite side of every other brace (alternate orientation). The holes in the support uprights need to be field drilled.

If excessive oscillation persists after bracing has been added, it may be the result of harmonics. This can occur when the conveyor operating speed generates vibrations with a frequency at or near the conveyor's natural frequency of its structure. This rare condition normally occurs between 85 FPM and 120 FPM. It may be minimized by adding more bracing or by either increasing or decreasing conveyor speed.

Sometimes it is better not to add a brace at the drive location. Some experimentation may be required.

Adjustable Channel Guardrail to CRUZchannel Options

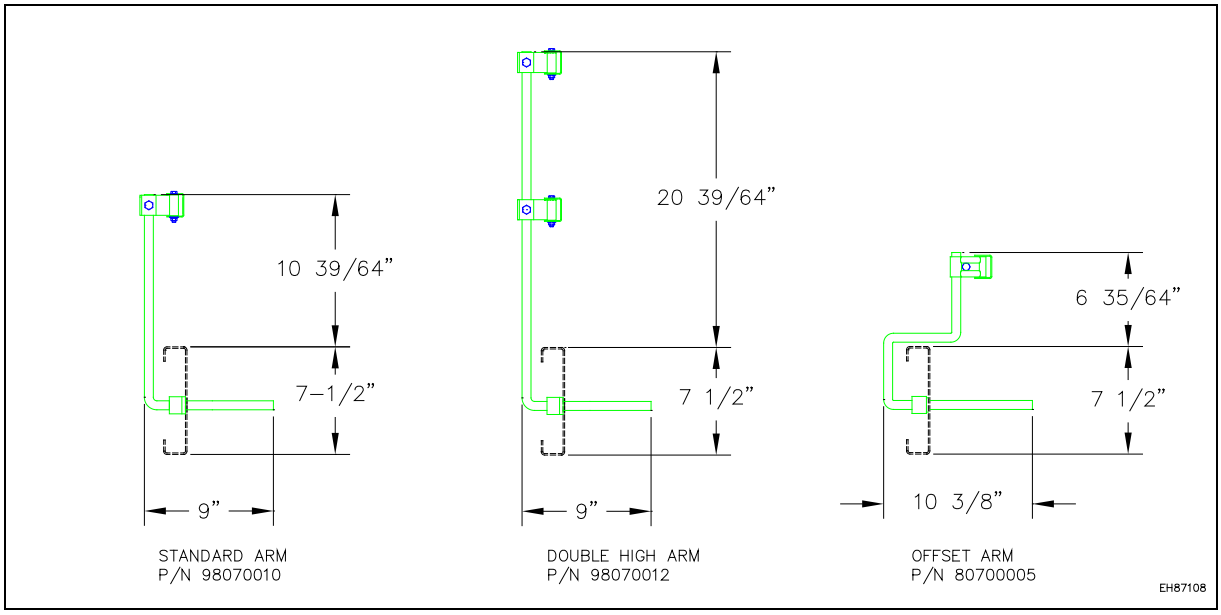

Air Supply Requirements

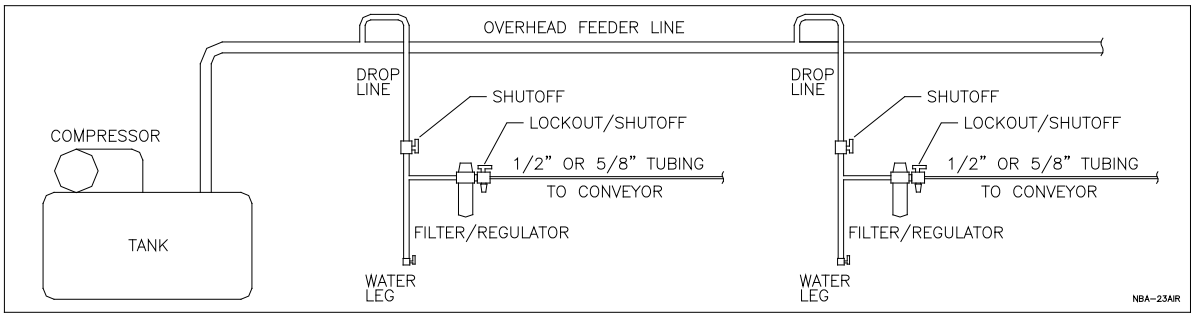

General

Every conveyor system is unique, with its own specific requirements. Therefore, the following are a general guidelines.

Main Feeder

Air velocity through the main feeder piping can be kept smooth with lower losses using large diameter pipe with minimum bends and restrictions. Standard weight black pipe or copper is suitable for plumbing the compressed air overhead to all points of use. PVC and aluminum piping are also commonly being used.

Air Drops

MHS Conveyor recommends using 3/4" pipe on air drops for high flow and low pressure loss. The drop is terminated with a drain at the bottom. A tee located prior to the drain branches off to the conveyor. This branch line must contain a lockout/shutoff. A shutoff must also be located in the drop before the branch tee. OSHA Rule 29, CFR1910.147 requires energy sources (air drops) be turned off and capable of being locked or labeled with a warning tag.

NOTE

The pneumatic system for product installations does not require lubrication. Lubrication may affect the valving operation and cause sluggish or erratic operation.

CAUTION

- All factory air lines must be thoroughly blown out to clear all debris. The regulator must be set at 40 PSI prior to connecting air to XP43.
- If your air compressor uses synthetic oil, a coalescing filter plus a regular filter of 5 micron is required.
- Synthetic oils will shrink the seals in pneumatic devices and valving.

Low Pressure Switch

An air pressure switch is recommended to be installed into the pneumatic circuit to detect a drop in air pressure below required levels. If pressure drops below approximately 35 PSI, the conveyor system will shut off.

Pneumatic Requirements

1. Regulator pressure set at 40 PSI.
2. Maximum conveyor length each way from regulator is 100'.
3. Locate regulator in center of conveyor for efficient air pressure distribution.
4. MHS Conveyor supplied low pressure regulator is required.
5. Customer supplied low pressure switch to be set at 35 PSI.
6. In high humidity or low temperature, use air dryer.
7. Use 5 micron filter.
8. Lockout/shutoff valve to be provided by air system installer on high pressure side of regulator.

CAUTION
• Never operate the XP43 over 45 PSI. Conveyor will be damaged at pressures over 45 PSI.

CRUZcontrol On Site Installation

Installation of CRUZcontrol on site will consist of the following:

- Connection of Air Supply air tubing between conveyor beds, closing and terminating the ends of the Air Supply tubing, and providing the air supply to the conveyor.
- Connection of the Logic Assembly interconnection cables from the last zone of a conveyor bed to the first zone in the next upstream conveyor bed.
- Providing a suitable 24 VDC power supply and connecting it into the string of Logic Assemblies.
- Providing a Singulation Release signal for the discharge zone (using Function Module).
- Providing a Slug Release signal for the discharge zone, if required (using Function Module).
- Obtaining Zone Status indications as required for system control.
- Terminating unconnected cable ends with Termination Plugs. This is suggested to protect the cable ends from damage.
- Adding auxiliary photoelectric sensors as required for discharge and full line condition sensing.

MHS Conveyor part number	Description
90139992	Male Termination Plug (use for terminating male cable ends)
90139994	Female Termination Plug (use for terminating female cable ends)

Logic Module Wiring

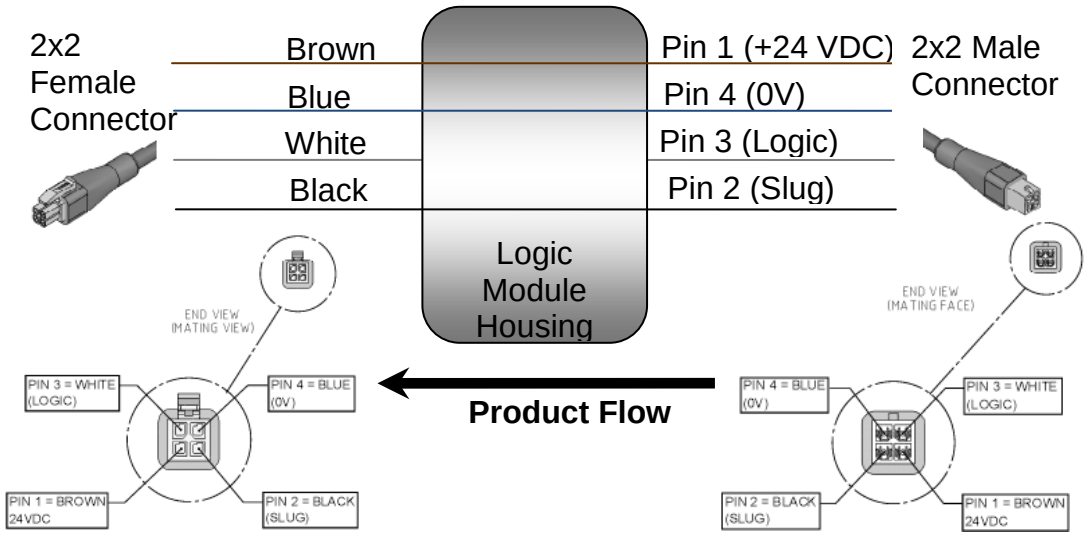

CRUZcontrol will come pre-installed on the conveyor with the following:

- The CRUZcontrol Logic Assemblies are installed on the same conveyor side channel that zone brakes are located.
- The air supply for the conveyor is plumbed the length of the conveyor bed, passing through each Logic Assembly. To connect the next bed's first module, enough tubing is provided at the ends of the conveyor bed.
- The zone control air is plumbed from the Logic Assembly to the zone air pucks or cylinders by ¼" of dia. clear tubing.
- The photoelectric sensors are mounted for each zone, along with the reflector across the conveyor bed. The photoelectric sensors are tested to insure proper alignment with the reflectors, as well as proper functioning of the Logic Assemblies.

WARNINGS AND CAUTIONS

⚠ WARNING

- Indicates a potentially hazardous situation which, if not avoided, could result in death or serious injury.

CAUTION

- To ensure safe operation of this product, a qualified electrician must perform installation and servicing. Check with local codes before installation.
- For maximum protection, follow UL listing requirements. The input line cable and line fuses must be sized in accordance with the rated input current of the unit.
- Do not make any connections when the Function Module is connected to the AC/DC utility/supply line.
- Before applying power to the module, make sure that the cover of the Function Module is closed.
- Any motor cables should cross CRUZcontrol cables at an angle of 90 degrees.
- If conduit is being used for wiring, use separate conduits for the input power wiring, the output power wiring, the signal wiring and the control wiring.
- Serviceability / Field Repair: Device is not serviceable.

CAUTION

- CRUZcontrol Logic Assemblies are designed to be fail-safe. A loss of module power, a disconnected or severed cable, or a dirty or failed photoelectric sensor will all result in the stopping of a zone, initiating accumulation beginning from the affected zone.
- In Progressive Logic mode, failure of a Logic Assembly to function properly could possibly result in product accumulating with zones not stopping as required. While this should be unlikely due to the fail-safe nature of the Logic Assembly, a product jam preventing product from blocking a zone sensor would also result in a zone not functioning. The effects of such a failure should be considered. This type of failure could result in excessive line pressure, eventually causing product to push through the discharge zone of the conveyor. If needed, jam detection sensors should be used to minimize the effects of such a failure.
- Conveyors should not be operated with 100% of the logic modules switched to the progressive mode in the contact accumulation mode. This could cause line pressure issues if there is a jam since in the release mode, progressive ignores the photo sensors and dumps all the zones at once, in the same way slug discharge operates. In the progressive release mode for contact accumulation, it is extremely important to set every 5th logic module to basic. Do not set all logic modules to progressive unless your line is under 20’ long. This limits a product jam condition line pressure to 16’ of conveyor. Failure to set every fifth logic module to basic can result in extreme line pressures that can damage your conveyor, product and could cause injury.
- CRUZcontrol provides the ability to slug release. If the line is set to Slug Release, all affected zones will run immediately, regardless of downstream conditions, resulting in the immediate release of product with little or no gaps. Both the Basic and Progressive Logic modes will release at the maximum possible discharge rate when slug release is enabled. Slug release does create a situation where a product jam will result in excessive line pressure buildup. If the slug release feature is used, it should be used with caution, and for a limited number of successive accumulation zones.
- The “Air to Brake” operation requires a consistent supply of air to operate safely and predictably. The system air supply should be monitored by a customer supplied air pressure switch to insure that adequate air pressure is available before operating conveyors.

Definition of Terms

Logic Assembly

The logic assembly is used to setup the type of automatic accumulation and discharge of product on the conveyor.

Function Module

The function module provides electrical isolation for external signals used to control a CRUZcontrol system.

Downstream or Upstream

In this manual, it is always in reference to product conveyor flow.

OFF

Off indicates a logical low signal and/or no power. For example if a logic line is OFF, there is no power on the logic line.

ON

On indicates a logical high signal and/or powered. For example if a slug line is ON, then there is power on the slug line.

Zone status

The zone is considered full if the local zone's sensor detects a package. The zone is empty if it does not detect a package

JP#, #-#

JP stands for "jumper terminal" and the number indicates which jumper terminal is being referenced. The "#-#" refers to the pins that are connected by the actual jumper. NC means the jumper is not connected to any terminal.
Ex. jumper terminal #1 pins 1 & 2 (JP1, 1-2)

TB#, #-#

TB stands for "terminal block" and the number indicates which terminal block is being referenced. The "#-#" refers to the pins that are being used on that terminal block.
Ex. terminal block #1 pins 1 & 2 (TB1, 1-2)

CRUZcontrol Concepts

The CRUZcontrol product line is a set of off the shelf components used to setup accumulation and discharge on XP43 conveyor. It consists of logic modules that detect product and control accumulation, function modules that release product, and 24VDC power supplies. There are also accessories such as sensors and cables to ease installation and interfacing.

CRUZcontrol is a 24VDC system that will automatically start accumulation when product reaches the end of an accumulation line. When a release signal is applied to a function module that is installed at the discharge end of an accumulation line, the product will begin to release. Product will continue to release until the signal is removed. The type of accumulation that occurs is based on the mode that the logic assembly has been configured for. The type of product release is based on logic assembly mode and function module setup.

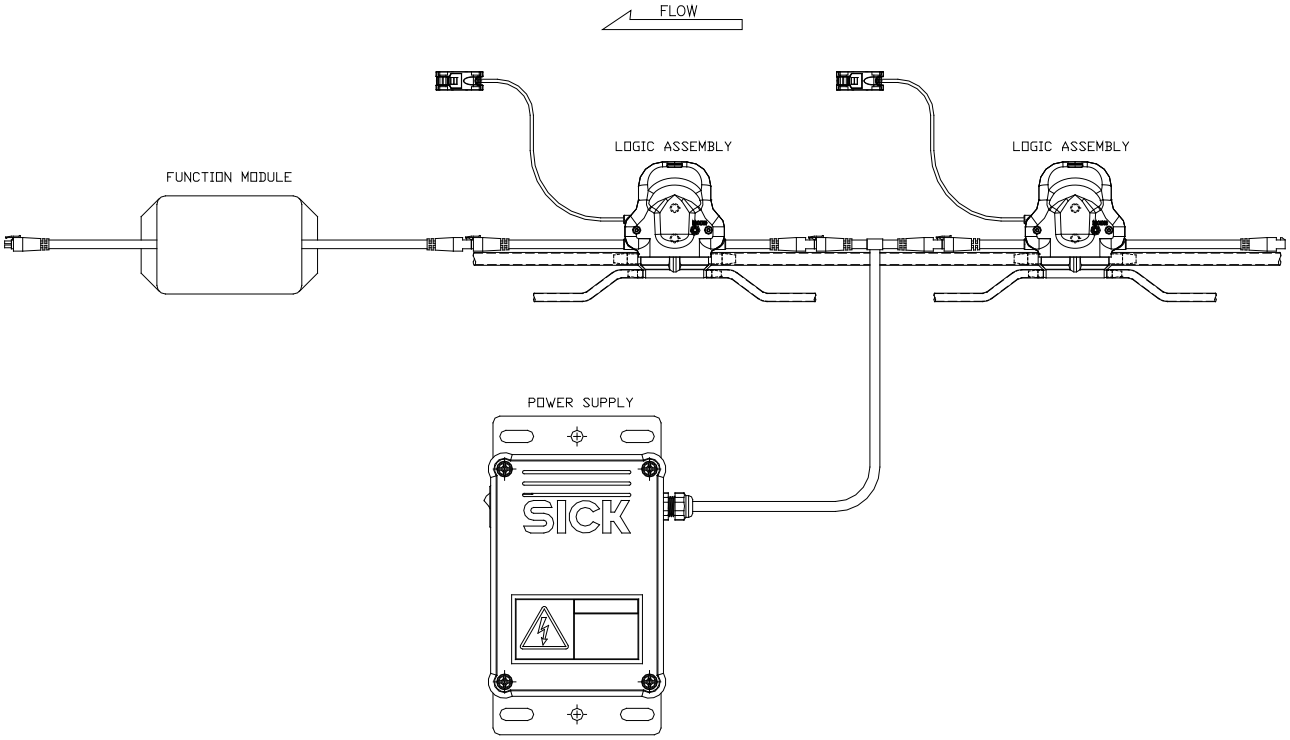

Figure 1: Basic Concept Layout

CRUZcontrol Logic Types

XP43 uses standard MHS Conveyor CRUZcontrol to accumulate and release product. Pneumatic brakes are employed to stop the line-shaft driven roller zones as the products accumulate. It is critical that the accumulation zones are longer than the longest product.

XP43 is a non-contact accumulator. This feature makes this conveyor ideal for “work in process” applications where sensitive products are being handled. In distribution warehousing applications, it is important to remember that XP43 will not dense pack mixed size product.

All product movement as described for transportation, accumulation, and discharge is based on zone length meaning only one product is in each zone. If more than one product should occupy a single zone, which could occur with small products, they will usually move together and stop together, but they could eventually become separated into different zones. This is true for both Basic Logic and Progressive Logic.

Basic Logic

Accumulation in Basic Logic Mode

Basic Logic functions such that when any two successive photoelectric sensors are blocked, the third zone’s logic module upstream is set to accumulate. Once a zone is in accumulation mode any product sensed in that zone will be accumulated (stop carrier roller) until product is not sensed in the downstream zone.

Products being transported on a Basic Logic conveyor are separated by a gap of one zone length minus the product length. This will reduce the transportation throughput capacity of the conveyor. The speed at which product is introduced onto an accumulation conveyor of this type must not exceed the speed of this accumulation conveyor.

Single Discharge from Basic Logic

A Singulation Release signal given to the function module will release product from the discharge zone. As released product clears the discharge photoelectric sensor, product stopped at the next upstream zone is released. This will create a one-zone length gap between all released products; assuming conveyor speeds (accumulation conveyor and downstream conveyor) are the same.

Slug Discharge from Basic Logic

A slug release signal given to the function module will release product in all connected zones simultaneously, resulting in the release of product with existing gaps.

Configuration Options

The Progressive Logic mode would allow the conveyor to receive and transport product at higher throughput rates, while the Basic Logic mode would provide a Singulation of product from the discharge zone.

Progressive Logic

Accumulation in Progressive Logic Mode

A zone is not set to accumulate product until all downstream zones hold accumulated product.

Discharge from XP43 Controlled Zones

A Singulation Release signal releases product from all accumulated zones at the same time. The gap between released products will be dependent on the product size, the number of products occupying each accumulation zone, and the conveyor speed.

Progressive mode only allows slug release. All zones connected together will be activated simultaneously. A Release signal given to the function module will release product in all zones, resulting in the release of product with existing gaps. A release signal can be given to the function module on TB1- single release or TB2- slug release, with no difference in operation.

Caution

CRUZcontrol Logic Assemblies are designed to be fail-safe. A loss of module power, a disconnected or severed cable, or a dirty or failed photoelectric sensor will all result in the stopping of a zone, initiating accumulation beginning from the affected zone.

With Progressive Logic, failure of a Logic Assembly to function properly could possibly result in product accumulating with zones not stopping as required. While this should be unlikely due to the fail-safe nature of the Logic Module Assembly, a product jam preventing product from blocking a zone sensor would also result in a zone not functioning. The effects of such a failure should be considered. This type of failure could result in excessive line pressure, eventually causing product to push through the discharge zone of the conveyor. If needed, jam detection sensors could be used to minimize the effects of such a failure.

CRUZcontrol provides the ability for slug release. If the line is set to Slug Release, all affected zones will run immediately, regardless of downstream conditions, resulting in the immediate release of product with existing gaps. Both the Basic and Progressive Logic Assemblies release at the maximum possible discharge rate when slug release is enabled. Slug release does create a situation where a product jam will result in excessive line pressure buildup. If the slug release feature is used, it should be used with caution, and for a limited number of successive accumulation zones.

CRUZcontrol Components

CRUZcontrol Logic Assembly

The CRUZcontrol Logic Assembly consists of a polarized retro-reflective type photoelectric sensor, pneumatic valve and logic module integrated into one assembly.

The photoelectric sensor will function reliably on conveyor widths up to 34 inches between frames. The sensor is polarized, and is not affected by shiny surfaces.

The sensor bracket as provided allows for easy adjustment of the sensor. An amber LED output indicator on the back of the sensor aids in the adjustment of the sensor. The LED is off if the sensor is not aligned, flashes if functional but marginally aligned, and is on steady if properly aligned. A green LED indicates power on status.

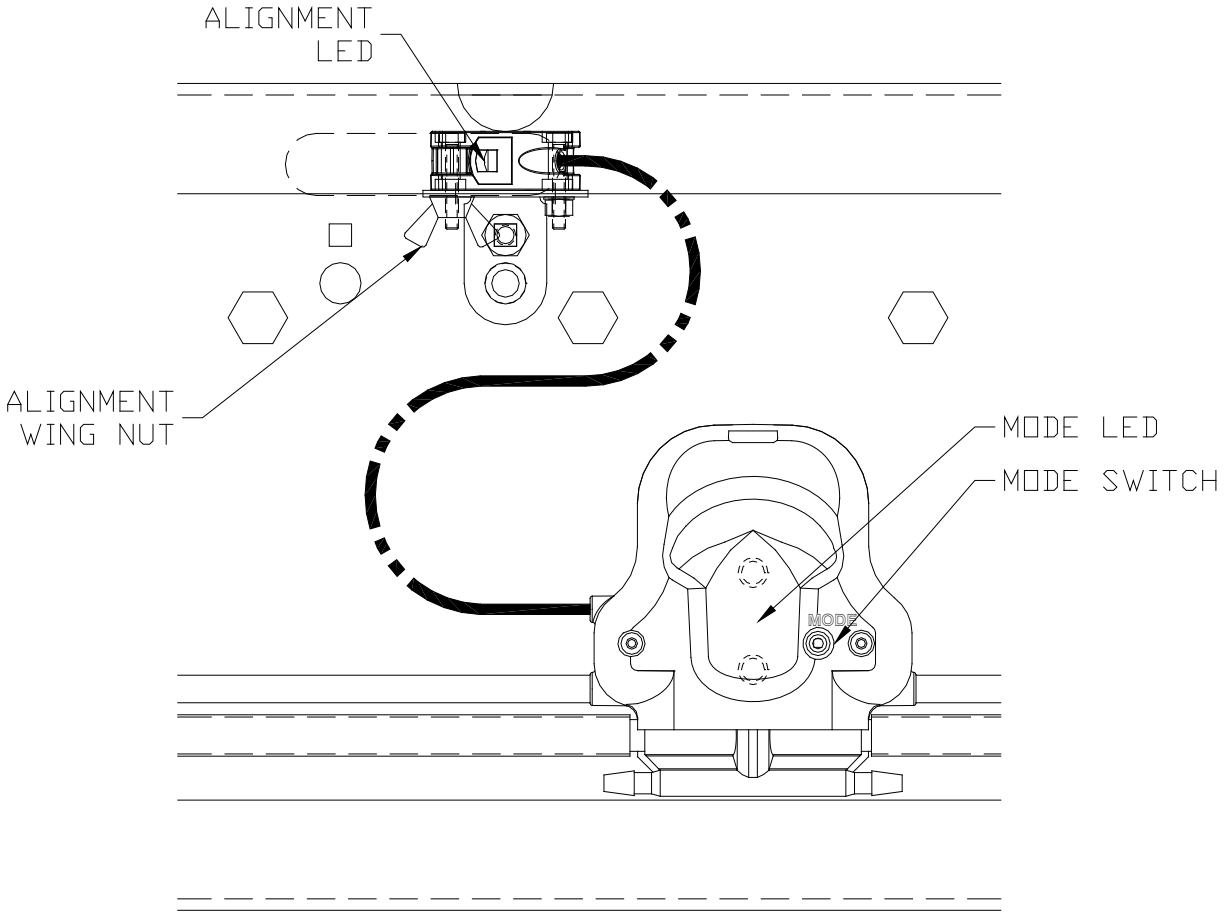

Figure 2: Logic Assembly Mode & Alignment

Logic Module Assembly

The CRUZcontrol Logic Module Assembly PN 1115898 provides an “air to brake” logic output (a “normally open” solenoid condition). When the logic module has power and the photoeye sees its reflector, its air valve will be in the closed position and brakes down.

Logic Assembly Functions

The CRUZcontrol Logic Module Assembly comes with a momentary button on the front of the housing allowing for selection of either Basic Logic or Progressive Logic mode. A Mode LED indicates either Basic (green) or Progressive (amber) has been selected. Pressing and then releasing the button toggles between the two modes.

Table 1: Logic Assemblies Functions

Function	Basic Logic	Progressive Logic
Single Accumulate	Yes	No
Slug Accumulate	No	Yes
Single Release	Yes	No
Slug Release	Yes	Yes

Logic Assembly Parts

Table 2: Logic Assemblies Part Numbers

Part Number	Description	Used with
1115898	Basic/Progressive Logic Module, Air to Brake,	XP43 straight conveyor and XP43 curves

Function Modules

The Function Module provides electrical isolation for external controls and creates controllable zones to facilitate CRUZcontrol applications.

Function Module Types

There are three different Function Modules, each providing certain functions.

Table 3: Function Module Functions

Part Number		Single RLS	Slug RLS	Pulsed RLS	Zone Stop	Zone Delay	Logic INT	Slug INT	Zone Status
1138074	Full Function Module	x	x	x	x	x	x	x	x
1138075	Release Function Module	x	x		x		x	x	
1138078	Zone Status								x

Function Module Functions

Single Release	
Definition	Only the discharge zone releases, when the discharge photoeye is clear the next zone releases. The discharge zone will continue to release until the release signal is removed.
Configuration	The logic assemblies must be in basic mode (mode LED is green). When releasing from the discharge end of the conveyor line all jumper terminals should be on pins 1-2.
User Action	Apply a high (24Vdc/120Vac) release signal to TB1, 1-2 if using isolated inputs, Or Apply a high (24Vdc) release signal to TB4, 3 if using non-isolated input.

Slug Release	
Definition	All zones that are connected in one continuous string release at the same time regardless of zone status. All zones will continue to release until the release signal is removed.
Configuration	The logic assemblies can be in basic or progressive mode. When releasing from the discharge end of the conveyor line all jumper terminals should be on pins 1-2.
User Action	Apply a high (24Vdc/120Vac) release signal to TB2,1-2 if using isolated inputs, the logic assemblies can be in basic or progressive mode. Or Apply a high (24Vdc) release signal to TB4, 3 if using non-isolated inputs, the logic assemblies must be in progressive mode.

Pulse Release	
Definition	Upstream Logic Assembly releases for a length of time set by ZS ON (0-20s) and then accumulates for length of time set by ZS OFF (0-20s).
Configuration	When releasing from the discharge end of the conveyor line jumper terminal JP3, NC - all other jumper terminals should be on pins 1-2.
User Action	Apply a high (24Vdc/120Vac) release signal to TB1, 1-2.

Logic Interrupt	
Definition	Breaks release signal from downstream Logic Assembly. Upstream zones are forced to accumulate despite downstream zone status.
Configuration	When using TB1 to release set jumper terminal JP3, 2-3 When using TB4 to release set jumper terminal JP4, 2-3.
User Action	Apply a high signal to TB1 (24Vdc/120Vac) or TB4 (24Vdc). No action required for interrupt for release.

Zone Delay	
Definition	After the downstream zone clears, the upstream zone releases only after the time set by the Logic Delay potentiometer has expired.
Configuration	Adjust Logic Delay potentiometer from 0 to 20 seconds.
User Action	No action required

Slug Interrupt Downstream	
Definition	Logic Assemblies downstream of the Function Module will not slug release when the Slug Release signal goes high.
Configuration	JP1, 2-3 all other jumper terminals should be on pins 1-2.
User Action	No action required

Slug Interrupt Upstream	
Definition	Logic Assemblies upstream of the Function Module will not slug release when the Slug Release signal goes high.
Configuration	JP2, 2-3 all other jumper terminals should be on pins 1-2.
User Action	No action required

Zone Status Indication	
Definition	Indicates full or empty status of the downstream zone on TB3.
Configuration	JP4, 1-2 and JP5, 1-2 for logic status or 2-3 for sensor status, all other jumper terminals should be on pins 1-2.
User Action	Connect to TB3 for zone status. The output transition of the Zone Status from OFF to ON or ON to OFF can be delayed by the Zone Status ON and Zone Status OFF Delay potentiometers. This is typically used to indicate a zone is full only after a product is detected for period of time.

Terminal and Jumper Descriptions

Terminal Descriptions	
TB1	Single release, Logic interrupt, Pulse release.
	This terminal is an isolated input; it must be used when signal voltage is from a supply that is different than the supply powering CRUZcontrol logic assemblies. It can be used when signal voltage is from same power supply that is powering CRUZcontrol logic assemblies.
TB2	Slug release.
	This terminal is an isolated input; it must be used when signal voltage is from a supply that is different than the supply powering CRUZcontrol logic assemblies. It can be used when signal voltage is from same power supply that is powering CRUZcontrol logic assemblies.
TB3	Zone Status (TB3 only available on full function module)
	This terminal is an isolated output; it must be used when signal voltage is from a supply that is different than the supply powering CRUZcontrol logic assemblies. It can be used when signal voltage is from same power supply that is powering CRUZcontrol logic assemblies.
TB4	Inputs
	This terminal is a non-isolated input; it must be used when signal voltage is from same power supply that is powering CRUZcontrol logic assemblies.
TB5	Outputs
	This terminal is a non-isolated outputs; output signal voltage is from same power supply that is powering CRUZcontrol logic assemblies.

Jumper Descriptions	
JP1	Downstream slug control
	Pins 1-2 = slug pass through Pins 2-3 = slug interrupt Pins 3-4 = slug interrupt Pins 4-5 = singulation to slug crossover Pins NC = slug interrupt
JP2	Upstream slug control
	Pins 1-2 = slug pass through Pins 2-3 = slug interrupt Pins NC = slug interrupt
JP3	Release control at TB1
	Pins 1-2 = single release Pins 2-3 = logic interrupt Pins NC = pulsed released
JP4	Release control at TB4
	Pins 1-2 = single release Pins 2-3 = logic interrupt Pins NC = zone status input (determined by JP5)
JP5	Zone Status control (JP5 only available on full function module)
	Pins 1-2 or NC = downstream logic status Pins 2-3 = downstream sensor status

Use of 115 VAC Controls

Important information regarding the use of 115 VAC controls:

These Function Modules will accept 115 VAC control inputs. There are some cautions that must be observed to avoid Function Module hardware failure.

Function Module signal inputs are protected against 500 volt spikes. 115 VAC control signal wiring run in conduit along with higher voltage motor wiring could experience voltage spikes that exceed the 500 volt limit. This can be prevented by running control wiring in separate conduit from motor wiring. Additional protection for the Function Module inputs can be achieved by using an MOV (metal oxide varistor) placed across the input terminals within the Function Module. Suggestions of suitable MOV's would include Panasonic ERZV07D241 or Littlefuse V250LA2.

Long conduit runs with motor wiring for multiple motors, and the use of variable frequency drives, all contribute to electrical noise, with a good potential for high voltage spikes. If there is any doubt, the control signals to the Function Modules should be run in conduits separate from motor wiring.

The Function Module signal inputs have high impedance. When connected to some output devices, such as some PLC triac outputs, the inputs could sense an "ON" state even if the output connected to it is not on. This can be corrected by adding additional loading to the PLC output. This can be done by adding a loading resistor, placed across the PLC output terminals. Do not put this resistor inside of the Function Module. The size and wattage rating of the resistor would depend on the output characteristics of the PLC card. A typical value would be 10,000 ohms (10K ohms) and 2 watts. The resistor would dissipate 1.32 watts at 115 VAC, so it will get warm.

Function Module Parts

Table 4: Function Module Part Numbers

Part Number	Description
1116731	Full Function Module
1116732	Release Function Module

Figure 3: Function Modules

Figure 4: Full Function Module Board Layout

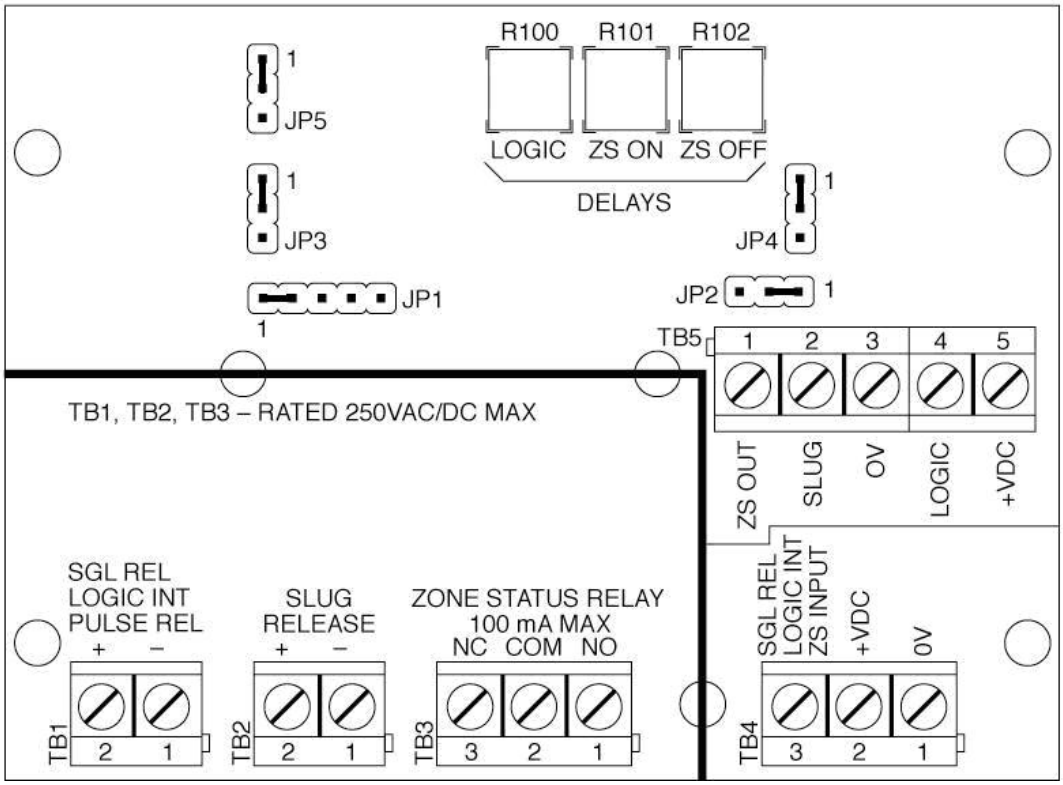

Figure 5: Full Function Module Circuit

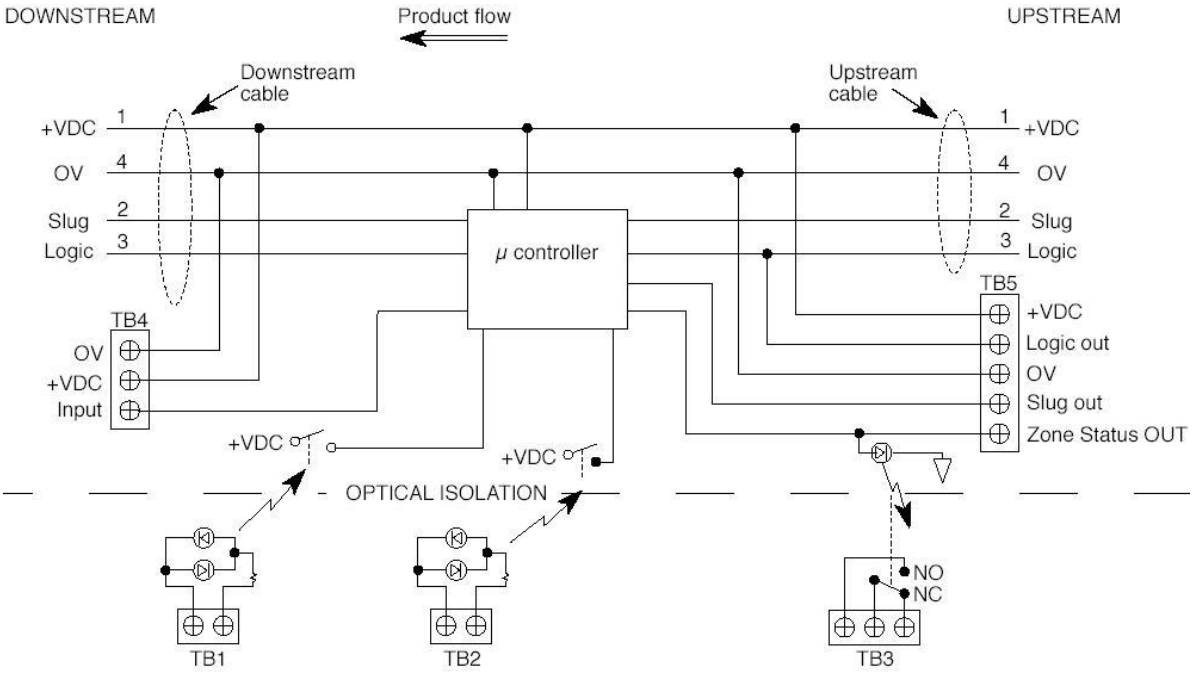

Figure 6: Release Function Board Layout

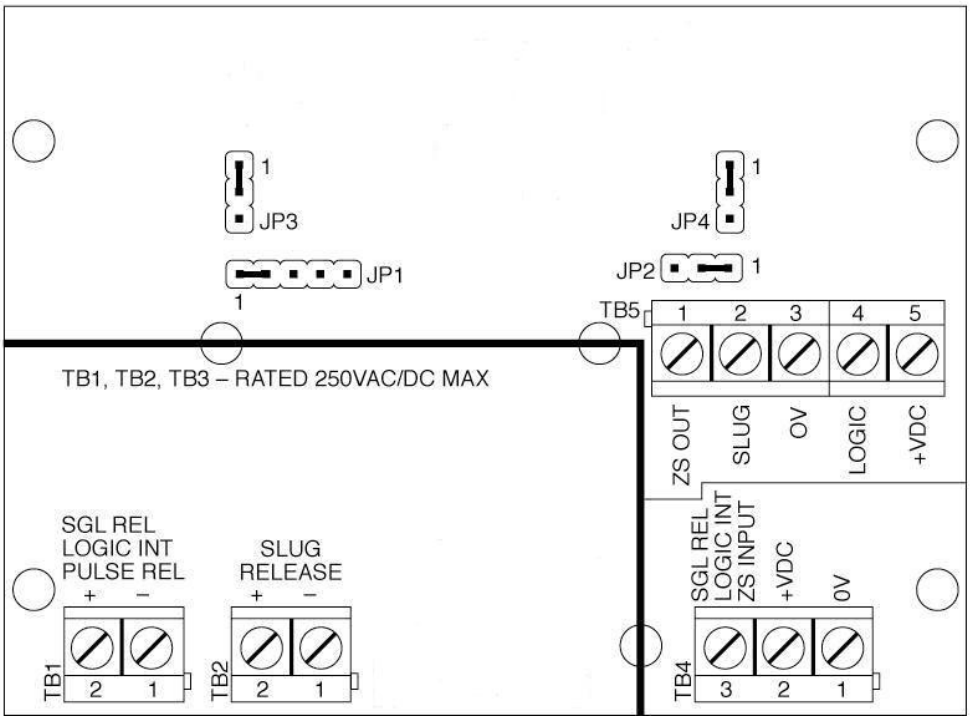

Figure 7: Release Function Module Circuit

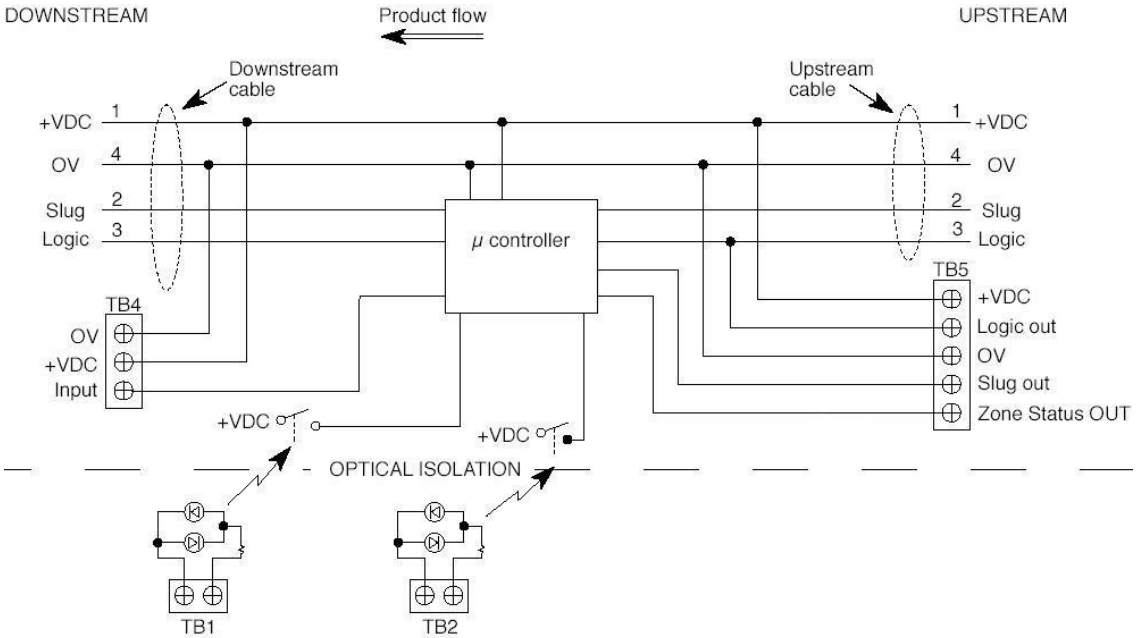

Power Supplies

A 24 VDC power supply is needed to power the logic assemblies and the function modules. One power T cable is prewired to the power supply. The power supply is available in 120VAC or 480 VAC versions.

Power Supply Requirements

CRUZcontrol operates from a Class 2 power supply voltage of 24-28 VDC. This limits the total number of CRUZcontrol Logic Assemblies that can be connected to one power supply. There is also a limit on the maximum number of Logic Assemblies that can be in one continuous string, based on the cable length and power requirement of Logic Assemblies. More than one string of Logic Assemblies can be connected to a power supply, as long as the power supply output rating isn't exceeded.

The Function Modules require 10mA of current at 24 VDC. This needs to be considered, as it will reduce the total number of Logic Modules that can be connected to one Class 2 power supply to a quantity less than stated in table 5.

Table 5: Maximum Number of Logic Modules per String

Number of Zones	Zone Length	Number of Zones
End Tap (95W, 24VDC)	4 ft. zones	27
End Tap (95W, 28VDC)	4 ft. zones	35
Center Tap (95W, 24VDC)	4 ft. zones	54
Center Tap (95W, 28VDC)	4 ft. zones	46

Power Supply Wiring

Connection made between two Logic Assemblies using a T Cable

This drawing illustrates a power connection made between two intermediate accumulation zones making use of a T Cable. Note that all power and control signals, including the Slug and Logic Signals, pass through the T Cable uninterrupted.

Figure 8: Two Logic Assemblies using a T Cable

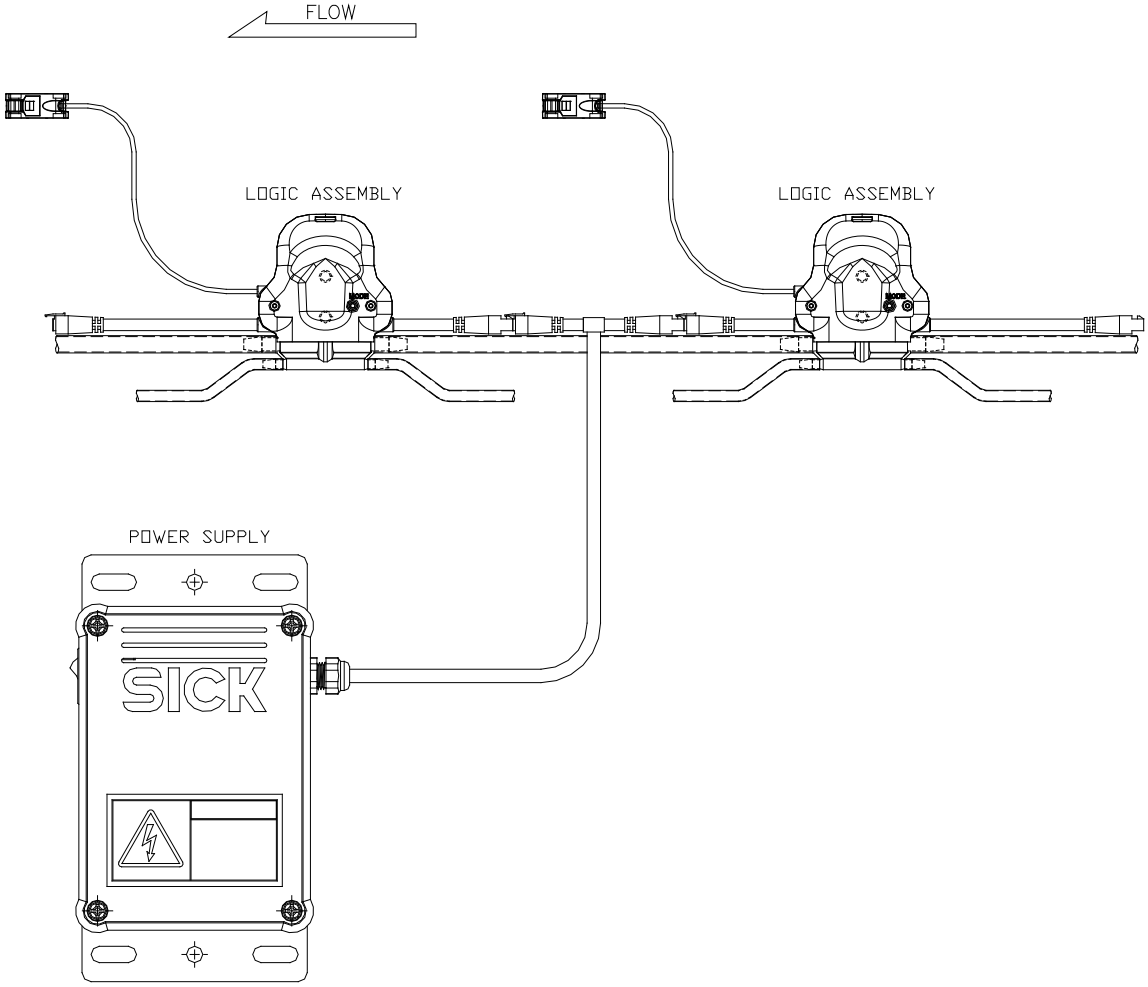

One Power Supply used to power two separate CRUZcontrol sections

This drawing illustrates the use of one power supply to power two separate, short CRUZcontrol sections on two different conveyors. This can be done to make better use of the full capacity of a power supply.

It could be necessary to extend the T Cable leads to reach the power supply location. This should be done with a wire gauge large enough to prevent noticeable voltage drop. The number of CRUZcontrol zones that can be connected per string must also be reduced based on the voltage drop of the wire used.

The brown lead on the T Cable connects to +24 VDC on the power supply. The blue lead on the T Cable connects to 0 VDC on the power supply.

Figure 9: Two Separate CRUZcontrol Sections

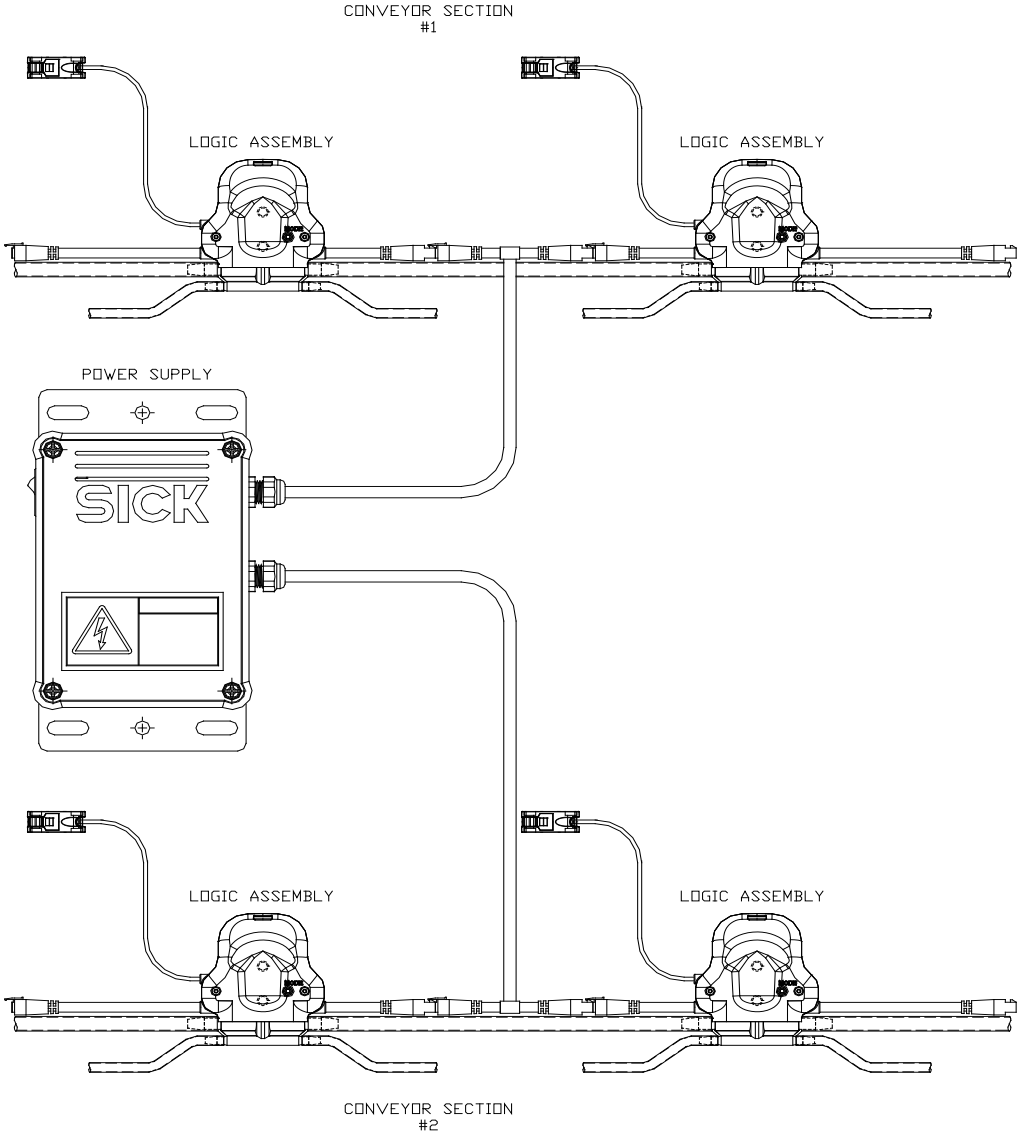

Using two Power Supplies to power one extended CRUZcontrol section

A CRUZcontrol string with more than 54 Logic Assemblies would require the use of more than one power supply. This can be done, but it requires that the power supplies be isolated from each other at the +24 volt line. This drawing illustrates how to isolate the two strings making use of a Power Interrupt Cable. The + VDC line is not passed through, while the Slug Release and Singulation Release Signals as well as 0 VDC are connected to pass the signals through uninterrupted.

Figure 10: One CRUZcontrol Section with Two Power Supplies

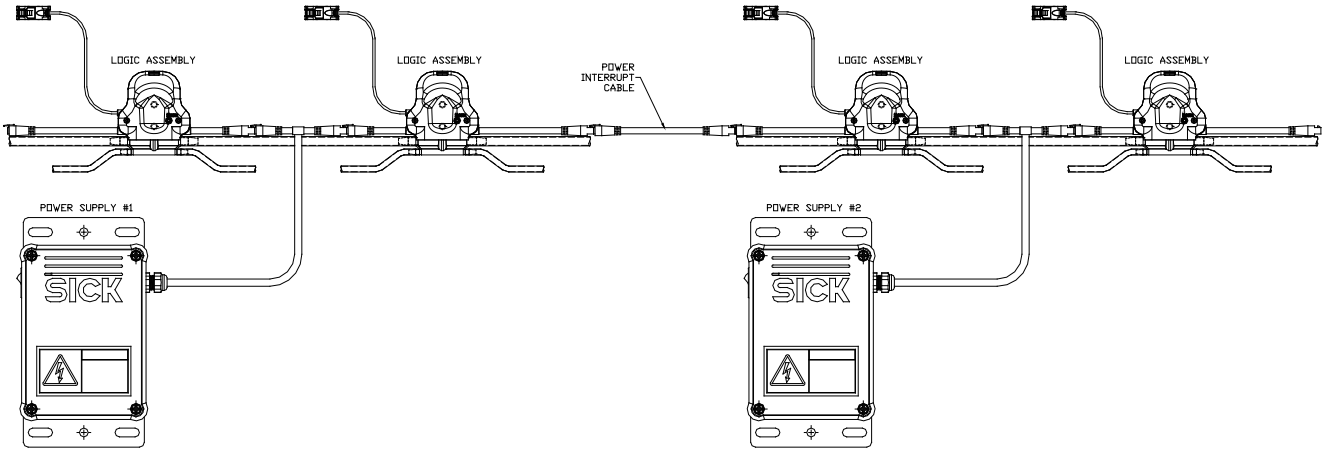

Power Supply Parts

Table 6: Power Supply Part Numbers

MHS Conveyor Part Number		Description
Kit Part Number 1117431	1117972	100-120/220-240 VAC input Power Supply and T cable
	1117937	Mounting Bracket
	1117379	T cable
Kit Part Number 1117432	1107030	380-480 VAC 2 phase input Power Supply and T cable
	1117937	Mounting Bracket
	1117379	T cable
	1117380	Power Interrupt Cable, 8 inches long

Accessories

Auxiliary Photoelectric Sensor

There is often a need to sense product presence on a CRUZcontrol equipped conveyor, with the sensors connected to a control system other than CRUZcontrol. To allow for this, adequate space has been provided along side of the CRUZcontrol photoelectric sensors to allow for the mounting of a second independent photoelectric sensor, sharing the same holes through the conveyor side channels and the same reflector. Appropriate holes are provided for the photoelectric sensor mounting bracket. The discharge end of XP43CZ conveyor is also provided with an additional mounting location for a photoelectric sensor and reflector.

The following kits are available, which include the photoelectric sensor and appropriate bracket. Even though not normally needed, an extra reflector and adhesive mounting tape is also included with each kit.

The 10-30 VDC photo sensors are similar to the CRUZcontrol sensors. They are light operate, with a 50 mA maximum output current, and come with a 27 inch cable (no connector).

Table 7: Photoelectric sensor

Part Number	Description
1117727	Photoelectric sensor with bracket, 10-30 VDC PNP output

Reflector

Replacement reflectors can be ordered with the following part number.

Table 8: Reflector

Part Number	Description
400004	Reflector
50005427	Tape, double sided, 1” square (2 needed per reflector)

Sensor Valve Assemblies

A Sensor Valve Assembly is used for applications not requiring accumulation logic, (controlling the zone with a PLC) but the solenoid valve and photoelectric sensor configuration as used in the CRUZcontrol channel is still desired.

Table 9: Sensor Valve Assembly

Part Number	Description
1116736	Sensor Valve Assembly

Extension Cables

The following extension cables are available to meet application requirements where longer zone lengths or skipped zones must be accommodated. Each cable has 4 conductors, with male and female 2X2 connector ends.

Table 10: Extension Cables

Part Number	Description
1117372	Extension Cable (39 inches)
1117373	Extension Cable (78 inches)
1117374	Extension Cable (156 inches)

Discharge Logic Assembly

Discharge Logic Control refers to using a standard Logic Assembly set to Basic Logic mode to control the release from the last discharge zone of a length of CRUZcontrol. This is typically done when CRUZcontrol conveyor (of any kind) feeds non-CRUZcontrol conveyor. There are no air connections made to the valve section of the Logic Assembly. When used this way, the added Logic Assembly is known as the Discharge Logic Assembly (DLA).

The Discharge Logic Assembly is mounted on the charge end of the conveyor immediately downstream of the last (discharge) zone of a length of CRUZcontrol accumulation conveyor. It is connected to the Logic Assembly of the discharge zone as shown. There is no need for a Function Module to be attached to it. The DLA does not need to be given a release signal. Product blocking that photoelectric sensor will stop release from the CRUZcontrol discharge zone, until the photoelectric sensor clears again. This operation can usually be left enabled and ready to function regardless of whether the receiving conveyor is running or off. There would be no need to interface the CRUZcontrol operation with the receiving conveyor operation, since the functioning of it is based solely on product movement.

Figure 11: Discharge Logic Control

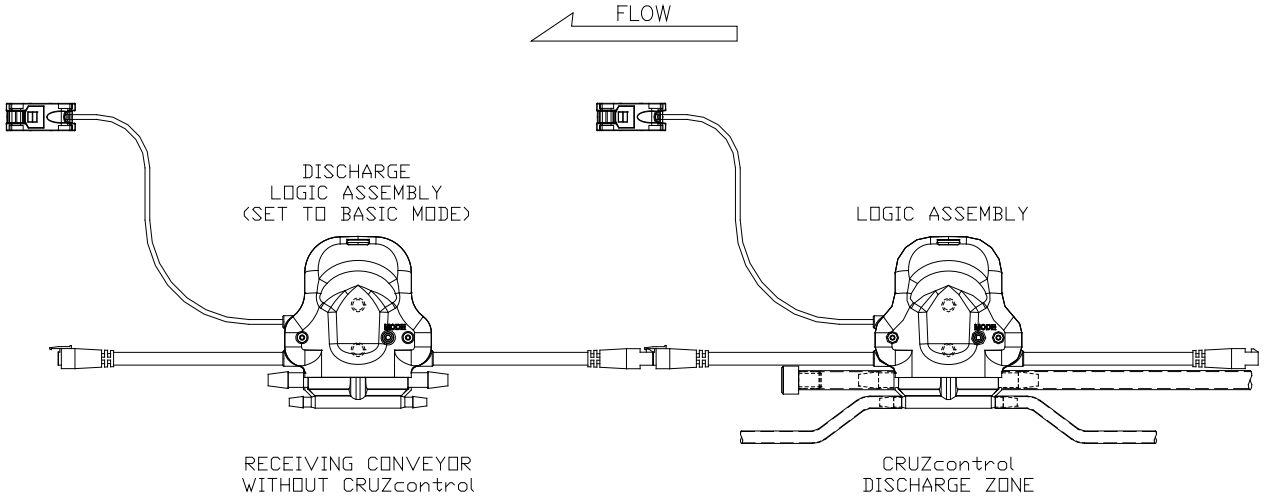

The following hardware listing is for two Discharge Logic Assembly kits consisting of the Discharge Logic Assembly, a reflector, and mounting brackets. The mounting brackets provide for the mounting of the Discharge Logic Assembly and reflector either ½ inch or 3 inches above a standard CRUZ side channel. Since every application is different, there will usually be a need to drill mounting holes for the brackets.

Table 11: Discharge Logic Assembly

Part Number	Description
1117859	Discharge Logic Assembly Kit, ½ inch above rollers scan height
1117860	Discharge Logic Assembly Kit, 3 inch above rollers scan height

CRUZcontrol On Site Installation

Pre-installed on the conveyor

- The CRUZcontrol Logic Assemblies are installed on the side channel of the conveyor bed.
- The air supply tubing for the conveyor is plumbed the length of the conveyor bed, passing through each Logic Assembly.
- The zone control air is plumbed from the Logic Assembly to the zone air pucks or cylinders.
- The photoelectric sensors are mounted for each zone, along with the reflector across the conveyor bed. The photoelectric sensors are tested to insure proper alignment with the reflectors, as well as proper functioning of the Logic Assemblies.

Field Installation

Bed to bed connections

- Connect air supply tubing between conveyor beds. Terminate the ends of the conveyor air supply tubing with supplied tubing plugs.
- Connection of the Logic Assembly upstream or downstream cable from the last zone of a conveyor bed to the first zone in the next upstream conveyor bed

System connections

Connecting the air supply to the conveyor
Connecting a power supply into the string of Logic Assemblies
Adding extension, power interrupt, or adapter cables if needed
Adding auxiliary photoelectric sensors as required for lead zone and line full conditions
Providing a release signal to the function module at the discharge zone

Figure 12: Logic Assembly

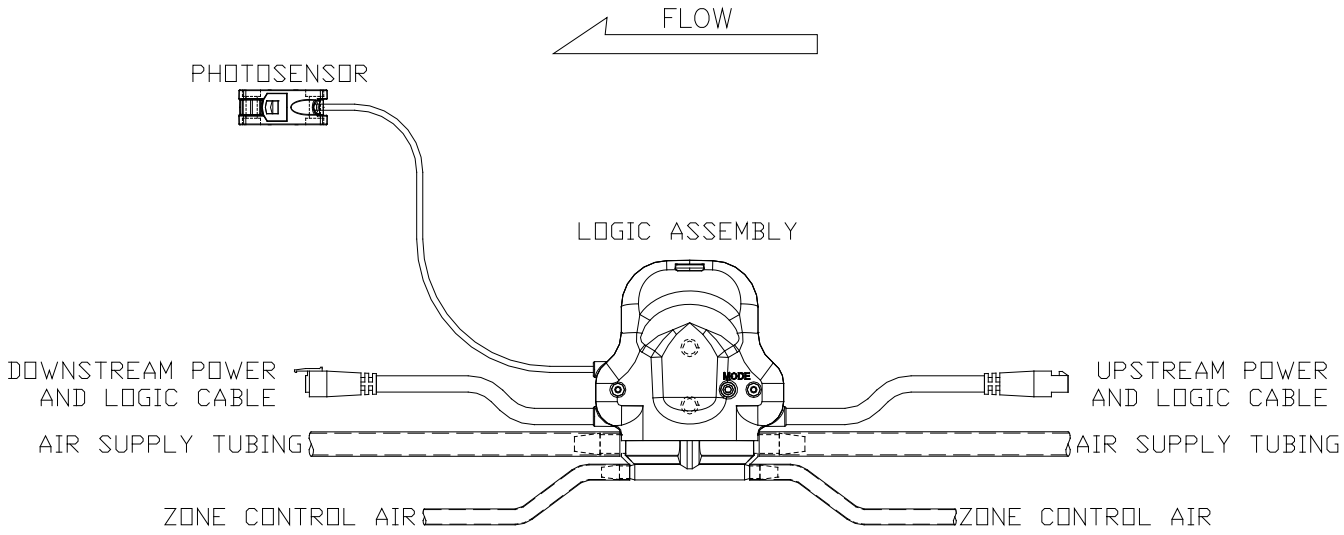

Conveyor Flow

The logic assembly wiring is “in-line” for left hand flow conveyors; for right hand flow conveyors the wiring direction will be reversed.

Figure 13: Left Hand Flow Conveyor Bed

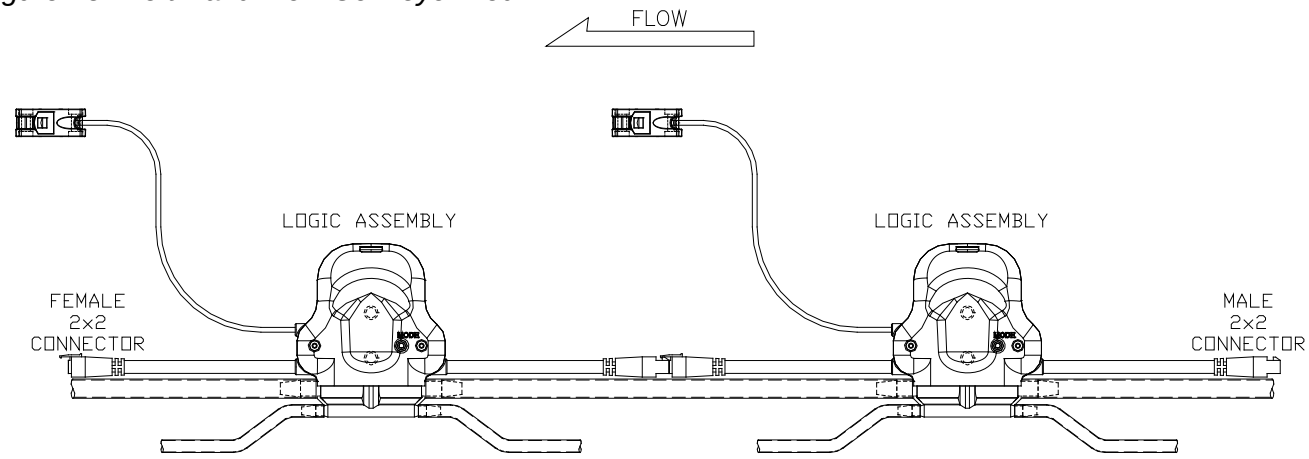

Figure 14: Right Hand Flow Conveyor Bed

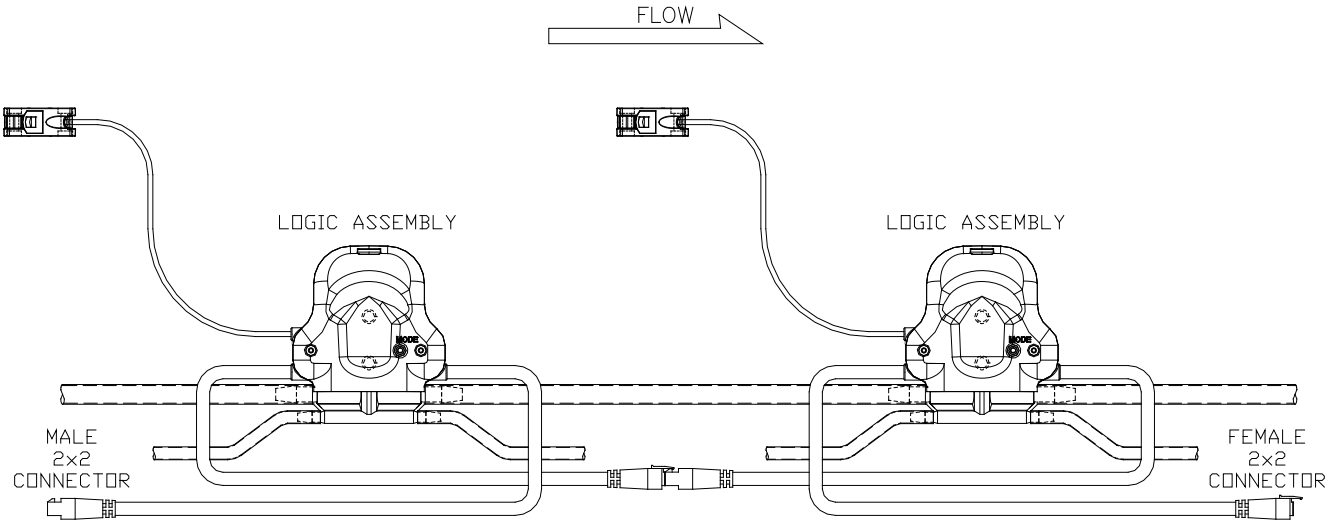

Example 1: Releasing from CRUZcontrol

Releasing from CRUZcontrol	
Problem	Releasing Accumulated Product
Solution	When using CRUZcontrol the product will automatically accumulate. A signal must be given to the function module to get it to release.
Configuration	Plug Function module into discharge zone. All jumpers are set to pins 1-2. Give function module a release signal either through the isolated input as shown in Figure 15 or through the non-isolated inputs as shown in Figure 16.
Operation	Product will release for as long as the release signal is given.

Figure 15: Isolated Input Single Release

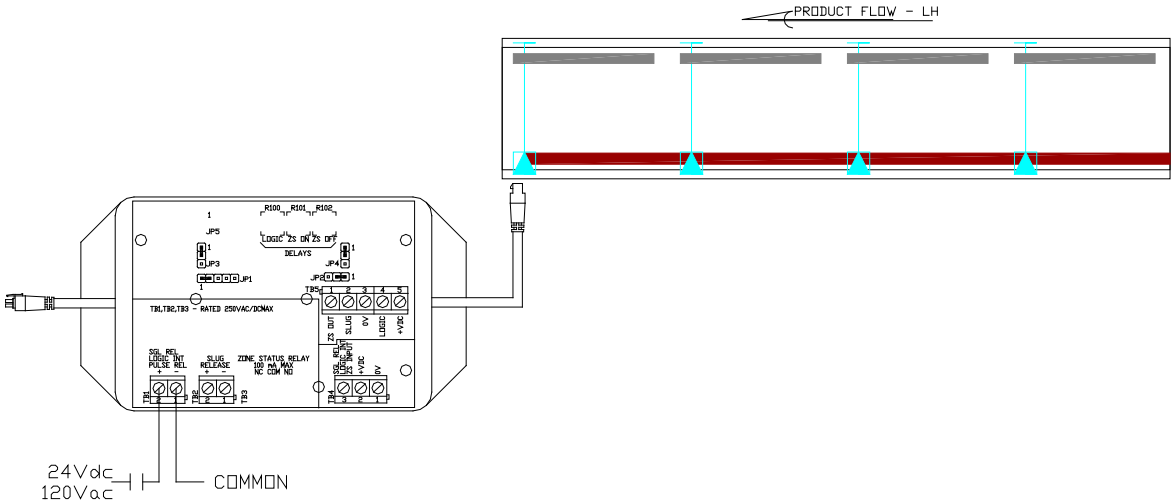

Figure 16: Non-Isolated Input Single Release

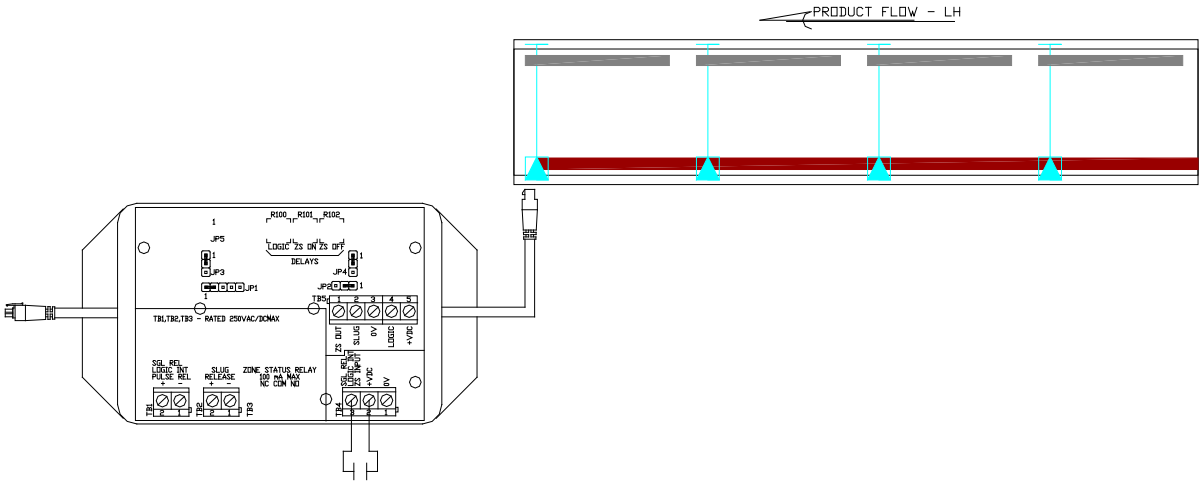

Example 2: CRUZcontrol around a curve. (low rate)

CRUZcontrol around a curve – Low Rate	
Problem	Product releasing into a curve then not having a zone to occupy. This situation occurs because it takes longer for product to go from zone 2 to zone 1 than it does for product to go from zone 3 to zone 2.
Solution	Delay zone 3 releasing until product has reached zone 1 This example will only work if the throughput rate is low.
Configuration	Set CRUZcontrol Logic Assemblies to Basic Logic mode. Plug full function module between zones 2 and 3. Set the logic delay R100 potentiometer to delay the release signal from zone 2 to 3 until product has reached zone 1.
Operation	Carton flow from zone 3, to zone 2, to zone 1, occurs as normal. When a carton first clears the zone 2 photoelectric sensor, the release of the next carton from zone 3 is inhibited by the setting of the logic delay relay in the full function module. No external logic signals are require. The release will need to be delayed until the carton released from zone 2 reaches zone 1.

The release delay is not retained in the event of a system shut down. If a carton is flowing around the curve and the system is shut down, upon start up a second carton could be released from Zone 2 to the curve before the first carton has had the chance to clear the curve. In that event, manual intervention might be required to clear the curve of the extra carton.

Figure 17: CRUZcontrol around a curve (low rate)

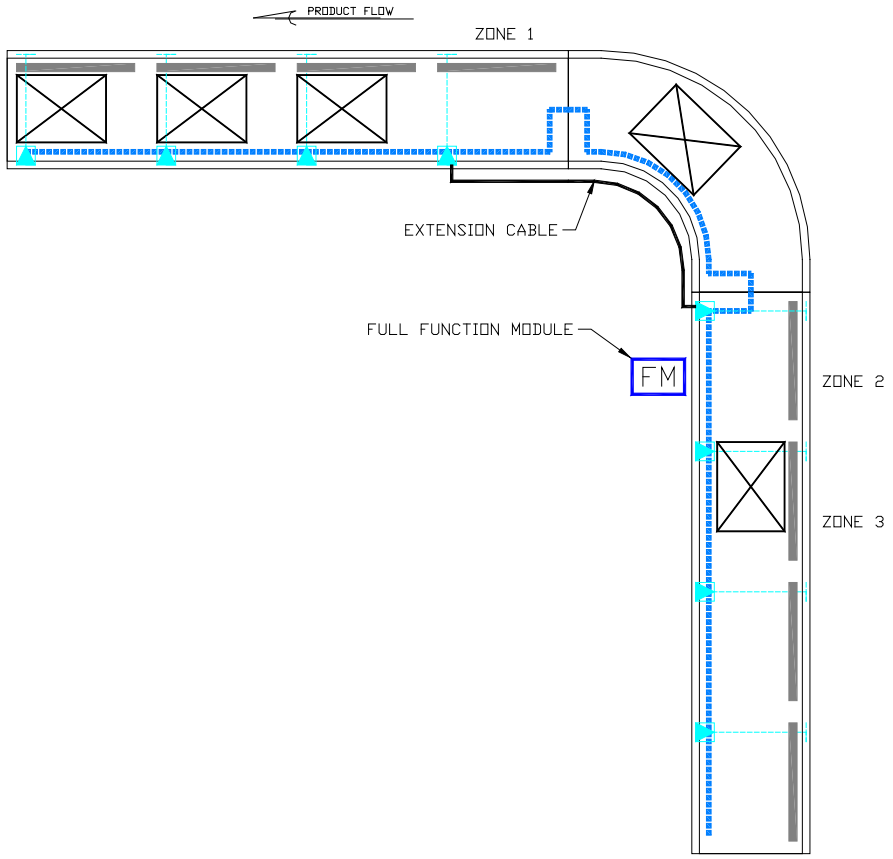

Example 3: Creating a work zone

Creating a work zone	
Problem	Creating a work zone in the middle of a section of CRUZcontrol
Solution	Use the release function module and interrupt the downstream logic to start accumulation.
Configuration	When using TB1 to interrupt the logic set jumper terminal JP3, 2-3 When using TB4 to interrupt the logic set jumper terminal JP4, 2-3
User Action:	Apply a high signal to TB1 (24Vdc/120Vac) or TB4 (24Vdc)
Operation	All product stops at a specific accumulation zone, when the contact is closed and is released when the contact is opened.

Figure 18: Work Zone

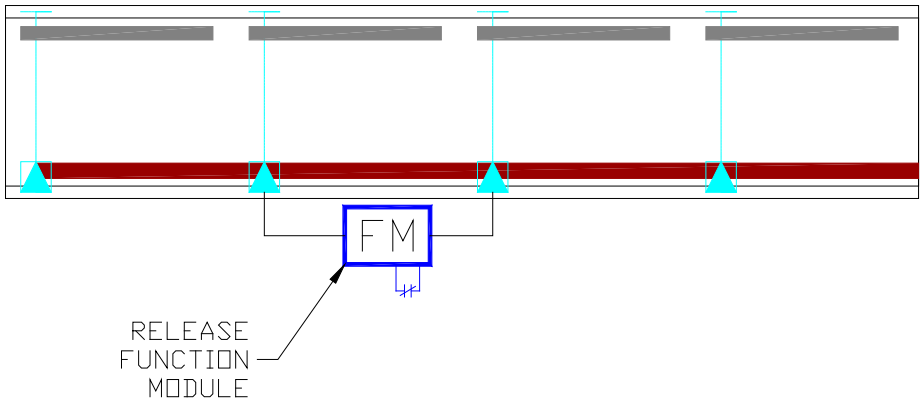

Figure 19: Work Zone Using TB1

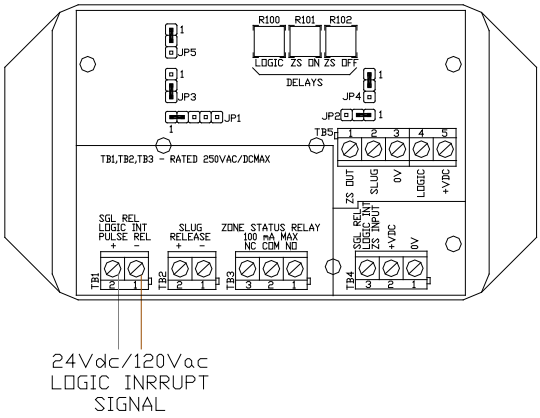

Figure 20: Work Zone Using TB4

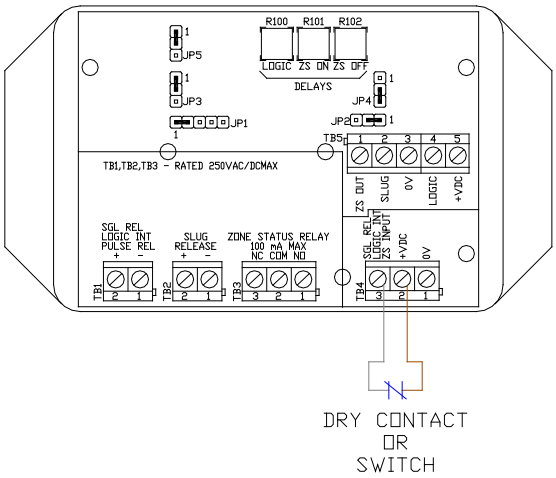

Technical Specs

Logic Assembly Specifications

Figure 21: Logic Module

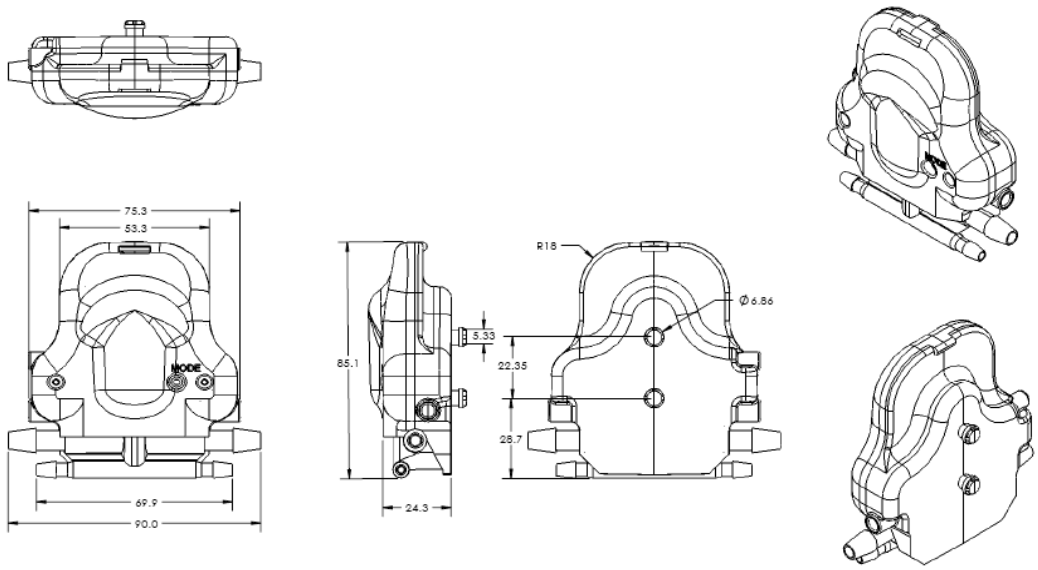

Table 12: Logic Module Mechanical Specification

Maximum Height	3.35 in. (85.1 mm)
Maximum Width	2.5 in. (63.5 mm)
Maximum Depth	1.25 in. (32 mm)
Daisy Chain Cable Length	Downstream - 28 in. (711 mm), Upstream - 28 in. (711 mm) ±1 in.
Daisy Chain Wire Gauge	22 AWG
Daisy Chain Connection Type	Overmolded 2x2; Downstream - Female, Upstream - Male
Sensor Cable Length	28 in. (711mm) ±1 in.
Input Air Connection	Barbed tube fitting for 3/8 in. O.D., 1/4 in. I.D. tubing
Output Air Connection	Barbed tube fitting for 1/4 in. O.D., 0.160 in. I.D. tubing
Enclosure Rating	IP20
Housing Material	ABS plastic
Color	Back cover and manifold - Black; Front cover - PMS 420
Mounting	Twin Keyhole (same as current module)
Ambient Temperature – Operating	+14…122°F (-10…+50C)
Ambient Temperature – Storage	-40…158°F (-40…+70C)

Table 13: Logic Module Electrical Specification

Supply Voltage	24 VDC (-20%/+15%)
Voltage Drop per Module	TBD
Current Consumption	TBD
Maximum Logic Output Current	100 mA
Response Time	<2.5 ms
Switching Frequency	200 Hz
Maximum # of Logic Modules per String	End Tap (95W, 24Vs) - 4 ft. zones = 25 End Tap (95W, 28Vs) - 4 ft. zones = 33 Center Tap (95W, 24Vs) - 4 ft. zones = 50 Center Tap (95W, 28Vs) - 4 ft. zones = 46
Approvals	CE, UL Listed, NFPA 70, NEC

Figure 22: Sensor

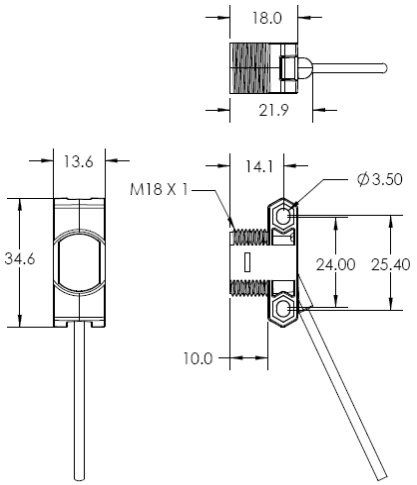

Table 14: Sensor Optical Specification

Sensor Model	ZL2-P2400S04
Sensor Part Number	2048176
Sensor Type	Reflex, Polarized
Switching Logic	Light operate
Light Source	Red LED
Output Indicator	Amber
Power Indicator	Green
Life Expectancy	100,000 hours @ 77°F (25C)
Light Spot Diameter	4.9 in. x 4.9 in. at 39.4 in. (125mm x 125mm at 1000mm)
Housing Material	ABS
Enclosure Rating	IP67

Table 15: Sensor Electrical Specification

Supply Voltage	10…30 VDC
Ripple	<5 Vss
Current Consumption	<20 mA (without load)
Output Current Max.	50 mA
Response Time	<1.25 ms
Switching Frequency	400 Hz
Cable Length	28 in. (711mm), ±1 in.
Connection to Logic Module	Hard-wire on the Downstream side
Ambient Temperature – Operating	-13…122°F (-25…+50C)
Ambient Temperature – Storage	-40…158°F (-40…+70C)

Table 16: Pneumatic Valve Specification

Operating Pressure Range	0-40 psi (0-2.75 bar)
Flow rate Capacity	≥ 0.04 Cv (40 Nl/m)
Ventilation Capacity	≥ 0.04 Cv (40 Nl/m)
Power Consumption	1W
Minimum Supply Voltage	19.2 VDC
Maximum Supply Voltage	28.8 VDC
Duty Cycle	100%
Life Expectancy	100 million cycles
Input Air Connection	3/8 in. (9.5mm) barbed fitting
Output Air Connection	1/4 in. (6mm) barbed fitting
Operating Mode2	N.O. (Air to Brake)
Air supply	Non-lubricated, 5 micron or less

Figure 23: Logic Module Wiring

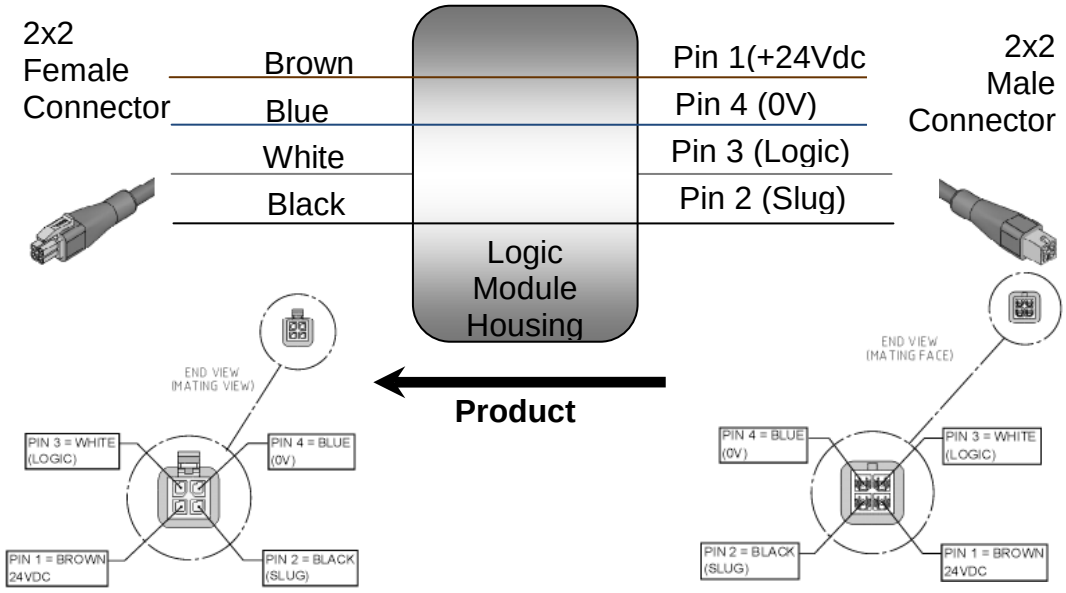

Figure 24: Function Module Specifications

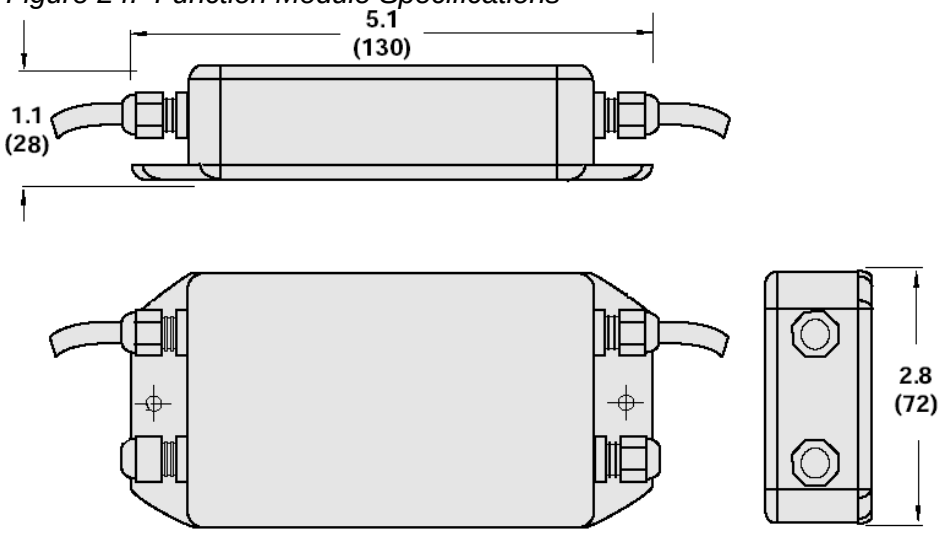

Table 17: Full Function Module Specification

Technical Data	
Interface to CRUZcontrol	
Upstream connection	Male, 2X2, 4-PIN, 300 mm cable
Downstream connection	Female, 2X2, 4-PIN, 300 mm cable
Power	
Supply voltage from daisy chain	18…30 VDC
Power consumption of ZIM	10 mA, no load
ZoneControl system power TB4 input	24…28 VDC typical. Limit values: 18…30 VDC
Input ratings	
TB4 Power inputs +VDC, Common	24 VDC typical, 30 VDC max.
TB4 Release/Interrupt input	18…30 VDC
	Guaranteed OFF Voltage: <= 4.0 VDC
	Guaranteed ON Voltage: >= 15.0 VDC
	Typical ON state current draw @24V: 4mA
TB1 Single Release/Logic Interrupt[1]	18…250 UC[1]
	Guaranteed OFF Voltage: <= 4 UC
	Guaranteed ON Voltage: >= 15.0 UC
	Typical ON state current draw 2.5 mA
TB2 Slug Release input[1]	18…250 UC[1]
	Guaranteed OFF Voltage: <= 4 UC
	Guaranteed ON Voltage: >= 15.0 UC
	Typical ON state current draw 2.5 mA
Output ratings	
TB5 Logic output	PNP; 2.21 kohm impedance typical
TB5 Zone Status output	PNP; 2.21 kohm impedance typical
Physical properties	
Terminal block	
Terminal block wire	30 to 12 AWG (2.5 … 0.2mm², strip length ¼" (6.0 mm)
Screw terminal torque	5 in-lbs. (0.56 Nm)
Housing	
Dimensions	5.125" x 3.75" x 1.125" (130mm x 95mm x 29mm)
Mounting	3/16" holes in mounting flange or double sided adhesive, any orientation
Enclosure rating	IP 42, NEMA 1
Sock and vibration	IEC 68 2-27, IEC 68 2-29, and EC 68 2-6
Operating temperature	-13…131°F (-25…55°C)
Storage temperature	-40…185°F (-40…85°C)
Approximate weight	0.9 lb. (400 g)

Power Supply Features

- Adjustable output voltage up to 24…28 VDC
- 115/230 VAC or 480 2 phase VAC input
- State-of-the-art design
- Type 1 enclosure, IP 20
- Bolt on mounting

Figure 25: MHS Conveyor PN 1117432 Dimensional Diagrams

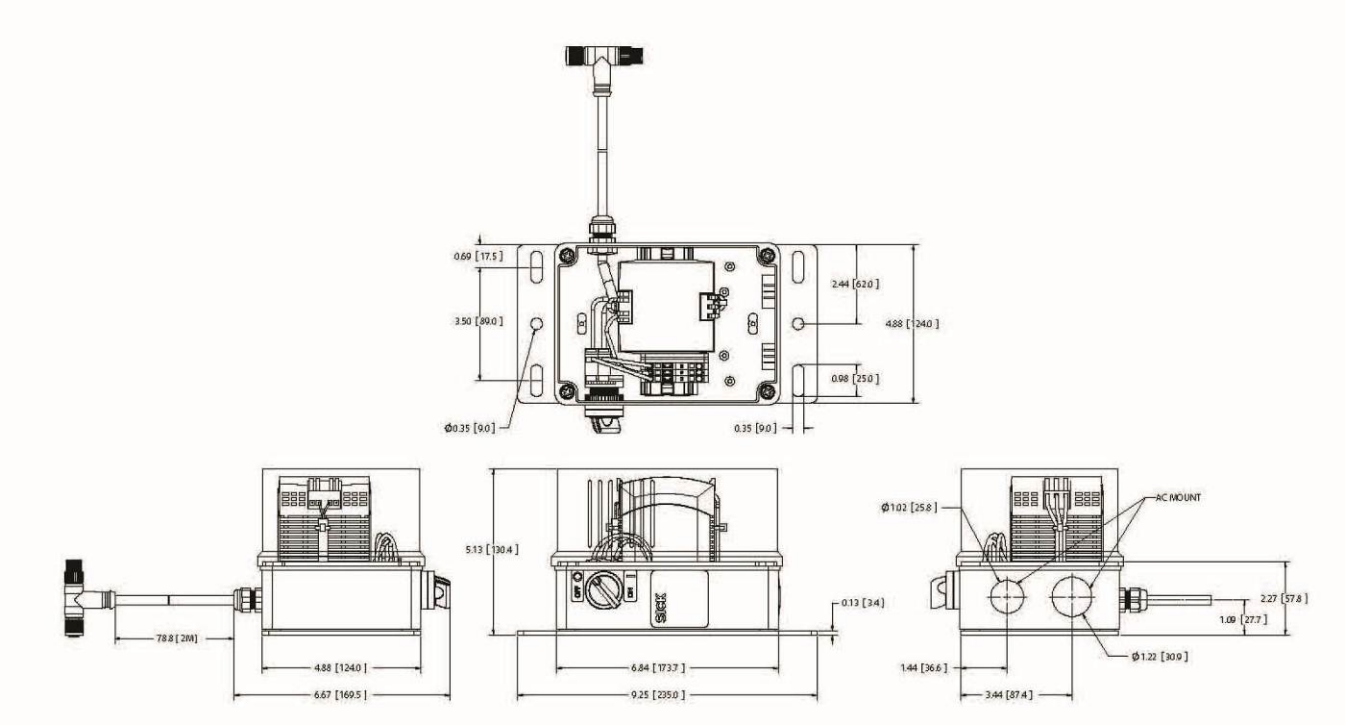

Figure 26: MHS Conveyor PN 1117432 Connection Diagrams

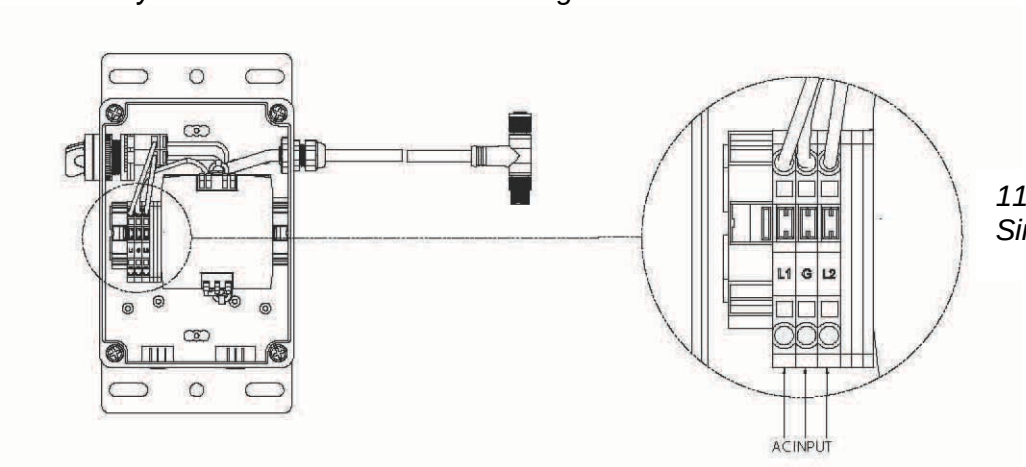

110VAC
Single phase

Figure 27: MHS Conveyor PN 1117431 Dimensional Diagram

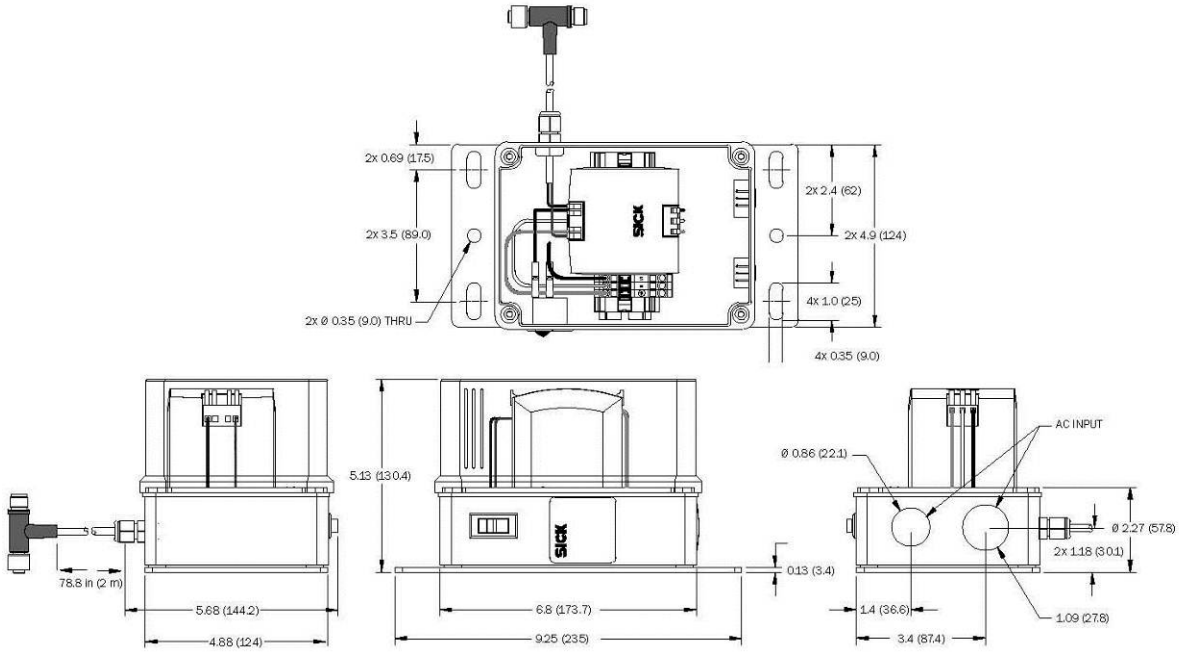

Figure 28: MHS Conveyor PN 1117431 Connection Diagram

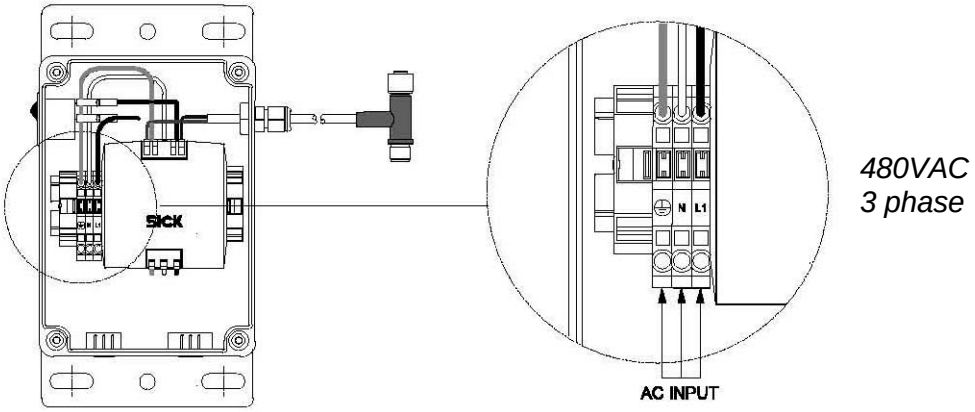

Power Supply Technical Data

Technical Data	PN 1117431	PN 1117432
Input Parameters		
Input Voltage Range V AC (nominal)	100…120/220…240 V	380…480 V (2 phase)
Input Voltage Range V AC (continuous)	85…132/1184…264 V	323…552 V (2 phase)
Input Frequency	47…63 Hz	47…63 Hz
Phase	1	2
Input Voltage Range V DC (see derating requirements)	220…375 V	consult factory
Input Rated Current	< 2.0 A (100 V AC)	< 0.42 A (400 V AC)
	< 0.95 A (196 V AC)	< 0.36 A (480 V AC)
Transient Immunity Over Entire Load Range		Consult factory
Output Parameters		
Output Voltage	24…28 V DC	24…28 V DC
Output Voltage Preset	24.5 V DC ±0.5%	24.5 V DC ± 0.5%
Ripple/Noise @ 20 MHz, 50 Ohm	< 50 m Vpp	< 50 m Vpp
Output Voltage Regulation Accuracy	0.5% Vout static	± 200 mV static
	±1.5% Vout dynamic	Dynamic not available
Output Rated Current	3.9 A (at 24 V)	3.75 A (at 24 V)
	3.2 A (at 28 V)	3.2 A (at 28 V)
Hold Up Time	> 20 ms (196 V AC, 24.5V/3.9 A)	Typ. 52 ms (at 400 V)
	> 20 ms (100 V AC, 24.5 V/3.9A)	Typ. 93 ms (at 480 V)
General Device Parameters		
Operating Temperature Range (Tamb) - Full Load	14…140°F (-10…60 C)	14…140°F (-10…60 C)
Operating Temperature Range (Tamb) - Derated	122…140°F (50…60 C)	122…140°F (50…60 C)
Storage Temperature	-13…185°F (-25…85 C)	-13…185°F (-25…85 C)
Humidity (Do not energize when condensation is prese	< 93%	< 95%
Input Cable Access	3/4 or 1/2 in. hole for conduit	
AC Connection Wires		
Stranded cable	0.3…2.5 mm2 / AWG 28-12	≥ 2,5 mm2 , AWG 26-12
Solid cable	0.3…4 mm2 / AWG 28-12	≥ 2,5 mm2 , AWG 26-12
Stripping at wire end	6 mm	6 mm
Note: secure wires from strain		
AC External Protection/Fusing	20A Max	30A Max
Output Connector Cables	M12 4-pin "T" cable	M12 4-pin "T" cable
Efficiency	90% (typical at 230 V AC, 3.9A)	89.5% (at 400 V)
		89.0% (at 480 V)
Protection Class - Type 1 Enclosure	IP 20 (DIN/IEC 60 529)	IP 20 (DIN/IEC 60 529)
MTBF	500,000 h @ 40C SN 29500	1.5 Mio h @ 40C SN 29500
	Not tested at MIL 217 GP40	482,000 h @ MIL 217 GP40
Dimensions	9.25 x 5.67 x 5.13	9.25 x 5.67 x 5.13
	(235 x 144 x 130.4 mm)	(235 x 144 x 130.4 mm)
Weight	3.9 lbs (1.8 kg)	4.4 lbs (2.0 kg)
Cover Screw Torque Rating (in-lb)	4±1	4±1
Mounting	Vertical mounting only. AC input enters from the bottom	
Clearance	Keep 4 in. clearance from ventilating slots in cover	
Applicable Standards		
EN 60 950-1, IEC 60 950	Yes	Yes
EN 60 204-1, EN 50 178	Yes	Yes
Third Party Approvals		
UL 508 Listing (US and Canada)	Multiple Listing	Multiple Listing
UL 60 950-1 Recognition (US and Canada)	Multiple Listing	Multiple Listing
NEC Class 2 According to UL 1310	Multiple Listing	Multiple Listing

Preventive Maintenance and Service

Do not perform maintenance on the conveyor until the startup controls are locked out and cannot be turned on by any person other than the one performing the maintenance. If more than one member of a crew is working on the conveyor, EACH CREW MEMBER MUST HAVE A LOCK ON THE POWER LOCKOUT. The air pressure must be turned off to the work area. All pneumatic devices must be de-energized to prevent accidental cycling of the device. Make sure all personnel are clear of all conveyor equipment before restarting the system.

WARNING	
	• Do not perform maintenance on the conveyor until the startup controls are locked out and cannot be turned on by any person other than the one performing the maintenance. If more than one member of a crew is working on the conveyor, EACH CREW MEMBER MUST HAVE A LOCK ON THE POWER LOCKOUT. The air pressure must be turned off to the work area. All pneumatic devices must be de-energized to prevent accidental cycling of the device. Make sure all personnel are clear of all conveyor equipment before restarting the system.

WARNING	
	• Before servicing or performing any work in the motor control panel, disconnect and lock out the main incoming service. If only the panel disconnect is off, the incoming side will still be hot.

General

The key to ensuring the expected return on investment is to protect against premature failure with a well-planned, follow-up program of preventive maintenance.

Preventive maintenance programs examine what may fail and then formulate action plans which will prevent failure or downtime. This kind of maintenance includes lubrication and replacement or repair of parts before failure but after expected life has been attained.

Preventive maintenance will save expensive downtime and wasted energy. It will increase the life of components. Along with preventive maintenance should be a record-keeping system. You must know what problems you have had in the past and when different components were serviced.

A visual and audible inspection should be taken every day. Visually you can see if a chain is loose, oil leaking, sprocket worn; or you can hear a faulty bearing, noisy chain or any other noise that might indicate a problem. When something major goes wrong with some component, a note should be made to see if a pattern to the problem occurs. All personnel working in close proximity to the conveyor should inform maintenance or their supervisor of any unusual noise.

WARNING	
	• Do not perform maintenance on the conveyor until the startup controls are locked out and cannot be turned on by any person other than the one performing the maintenance. If more than one member of a crew is working on the conveyor, EACH CREW MEMBER MUST HAVE A LOCK ON THE POWER LOCK OUT. The air pressure must be turned off to the work area. All pneumatic devices must be de-energized to prevent accidental cycling of the device. Make sure personnel are clear of all conveyor equipment before restarting the system.

Motor and Gearcase

The drive unit should be checked monthly. Check the motor gearcase for leaking seals. If reducer is other than Reliance Relialube, check the gearcase for proper oil level and add the approved oil for your particular unit. Check for overheating, vibrations and dirt buildup. With Reliance Relialube reducers, change oil only when performing maintenance that requires gearbox disassembly using Mobil SHC-634. When replacing the motor, relubricate using Fel-Pro C5A Anti-Seize or Mobiltemp 78 grease in the reducer bore and on the motor shaft.

Chains and Sprockets

Chains and sprockets should be checked monthly. Look for correct alignment. In time, set screws may loosen and allow the sprockets to become misaligned. Use a straight edge held parallel to both sprockets to check alignment. Shift one of the sprockets if the straight edge shows it is necessary.

WARNING	
	• REPLACE ANY CHAIN GUARD REMOVED in order to adjust, check or lubricate chain and sprockets. Guards are furnished and installed to prevent personal injury during operation; maintain them on the unit.

Keep the chain clean and lubricated. Chains may be cleaned by wiping with a rag soaked in nonflammable cleaning solvent.

Lubrication of roller chains is essential to effectively minimize metal-to-metal bearing contact of pin-bushing joints of the chain. Oil should be applied to outside plate and inside plate edges, since access to pin-bushing area is possible only through clearances between the outside plates and the inside plates. Oil applied on the center line of the rollers cannot reach pin-bushing joints.

A good grade of SAE30 non-detergent petroleum base oil is recommended. Heavy oils and greases are generally too stiff to enter and fill the chain joints.

WARNING	
	• Do not use gasoline or kerosene for cleaning. Use nonflammable solvent only.

During the monthly check, look for damaged or worn links in the chain and wear spots on sprockets. If either the chain or sprockets are worn, then both must be replaced and the cause of wear corrected.

If chains have stretched so that above adjustments cannot be made, remove a link and reconnect. If removal of one link makes the chain too short, add an offset half link and reconnect. Chains should be tightened until there is 1/2" total movement at center of span (1/4" each way of center).

New chains should be installed under slight tension as they will elongate a small amount due to seating of pins and bushings during the first 250 hours of operation. Chains on drives having near vertical centers should be kept reasonably tight with idler sprockets.

Timing Belts & Pulleys – Pulley Alignment

Pulley alignment is critical to reducing wear and extending belt life.

First to minimize the overhung load on the reducer, place the pulley on the reducer shaft as close to the reducer as possible.

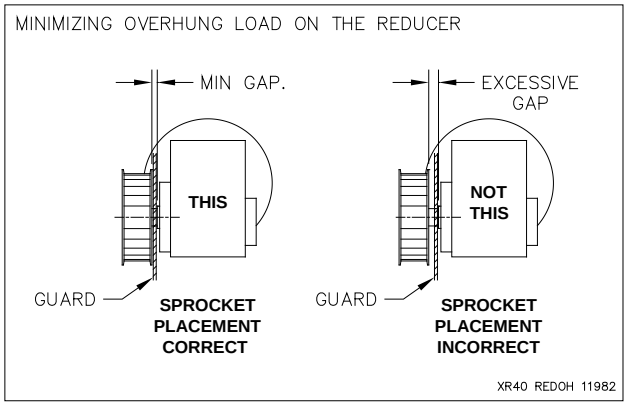

Then align the pulley on the line-shaft with the reducer pulley by placing a straightedge across face of pulleys as shown below. The straightedge should cross pulleys as near their center as possible.

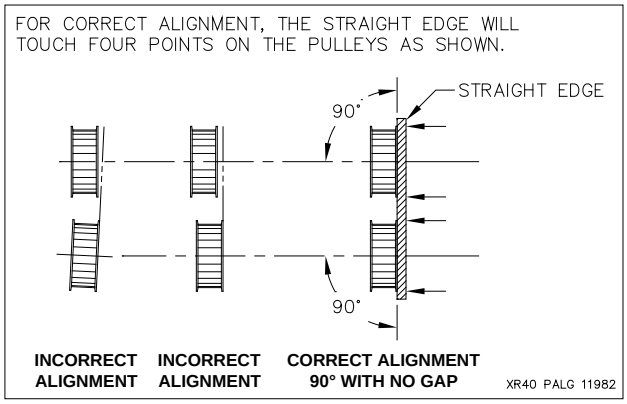

For jumps follow the above procedure starting out by placing the pulleys as close to the line-shaft bearings as possible and aligning the pulleys as shown above.

Timing Belt Take-up

In general, belt take-up is accomplished either by moving the pulley or by take-up rollers.

For dives the belt take-up is done by moving the reducer-motor assembly which moves the drive pulley. Remember to check the pulley alignment after moving the reducer.

For jumps, the belt take-up is done by the use of take-up roller(s). For 18 wide and narrower, there is only a single take-up roller. On wider widths, two take-up rollers are used. The take-up rollers must be placed under the return side of the belt as shown below. The belt is tensioned by moving the roller(s) up into the belt. When two take-up rollers are used, try to move them up evenly.

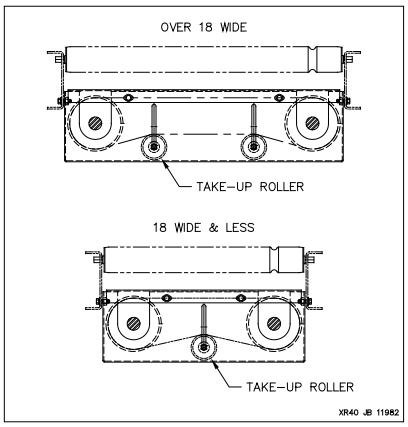

Timing Belt Tension

You must use one of the two following methods of tensioning the timing belt. Following these methods will properly tension the belt. If after tensioning you have problems with the timing belt jumping teeth, you need to look for problems that can cause excessive drive and correct them. Higher tensions than those recommended can lead to component failure and void the warranty!

CAUTION
• Excessive belt tension may cause component failure.

Method 1

The preferred method of measuring belt strand tension is by using a Sonic Meter. Use either the Gates 505C or 507C Sonic Meter which will measure the belt strand tension directly in pounds.

For our standard HPR or HTD, 8 mm pitch, 30 mm wide Belt, use the following information to program the meter.

- HPR Belt weight = 5.8 g/m
- Belt width = 30.0 mm
- Belt span = Center Distance in millimeters

NOTE

To covert inches to millimeters, multiply by 25.4. For example, if your center distance measures 7 7/8” multiply 7.875 by 25.4 to get 200 millimeters.

The measured belt strand tension should be as follows:

- For drives the belt strand tension should be 50-80 lbs.
- For jumps the belt strand tension should be 30-50 lbs.

NOTE

You must use either the Gates 505C or the Gates 507C Sonic Meter for measuring the belt tension.

Method 2

If you do not have a Sonic Meter, the belt tension can be measured by applying a set amount of force and measuring the resulting belt deflection. The following table gives you the information you need for this.

Timing Belt Tensioning Specifications For Standard HPR or HTD, 8 mm Pitch, 30 mm Width Belts, Using the Tension Force as noted below. Round all fractional span distances to the nearest inch. Deflection tolerance: ±1/64”							
Span	Deflection	Span	Deflection	Span	Deflection	Span	Deflection
6”	3/32”	20”	5/16”	34”	17/32”	48”	3/4"
7”	7/64”	21”	21/64”	35”	35/64”	49”	49/64”
8”	1/8”	22”	11/32”	36”	9/16”	50”	25/32”
9”	9/64”	23”	23/64”	37”	37/64”	51”	51/64”
10”	5/32”	24”	3/8”	38”	19/32”	52”	13/16”
11”	11/64”	25”	25/64”	39”	39/64”	53”	53/64”
12”	3/16”	26”	13/32”	40”	5/8”	54”	27/64”
13”	13/64”	27”	27/64”	41”	41/64”	55”	55/64”
14”	7/32”	28”	7/16”	42”	21/32”	56”	7/8”
15”	15/64”	29”	29/64”	43”	43/64”	57”	57/64”
16”	1/4"	30”	15/32”	44”	11/16”	58”	29/32”
17”	17/64”	31”	31/64”	45”	45/64”	59”	59/64”
18”	9/32”	32”	1/2"	46”	23/32”	60”	15/16”
19”	19/64”	33”	33/64”	47”	47/64”	61”	61/64”
For Drives use a Tension Force of 4 lb. ± ½ lb. For Jumps use a Tension Force of 2 lb. ± ½ lb. For MOVIMOT drives use a Tension Force of 1 lb. ± ½ lb.							

Rollers

Precision bearings require no maintenance. For severe or dirty conditions, non-precision bearings may require periodic lubrication (approximately every six months) if they sound dry. If the rollers have unsealed bearings, lubricate them by removing them from the bed and place several drops of a good grade machine oil in the small opening around the inner race hub and spin the axle. Repeat for each end of the roller. Standard rollers are greased for life and normally do not require maintenance. However, if the conveyor operates over 120 FPM more than a single shift, it is under severe duty conditions. Periodically removing the rollers has an added benefit of distributing the wear on the bearing inner race by rotating the axle to a new position. If a defective roller bearing is found, replace the roller.

WARNING

- Use a blunt object to remove rollers from frame.
- A screwdriver or similar pointed object could slip and cause injury.

Do not allow tape, banding, shrinkwrap, etc. to build up on roller or pulleys. This can cause rollers to jam and the belt to mistrack. If this is a common occurrence due to the product packaging, clean up on a regular schedule.

Drive Belts

Drive belts should require no actual maintenance. Visually check for broken or worn belts. Normally, a few broken belts will not hamper the performance of XP43. Periodically replace any broken belts. If belt shows signs of abrasion, check for belt rub against any object or foreign matter in roller groove.

Line-shaft Bearings

The line-shaft bearings have a dual set screw collar. After one week of constant operation, check each bearing to see if the set screws are loose. Recheck every six months.

Motor Controls

Inspection (semi-yearly)

WARNING

- Before servicing or performing any work in the motor control panel, disconnect and lockout the main incoming service. If only the panel disconnect is off, the incoming side will still be hot.

Excessive overheating is indicated by discoloration of components. Most often, these symptoms are a sign of loose connections. If left uncorrected, this can eventually cause arcing between components, leading to destruction of the controls. It is normal to find the interior of the control cabinet very warm when it is first opened.

The condition of contacts must be checked on all contactors and starters that show signs of overheating. Make sure that they are free of dust and are not excessively pitted or burned. When badly burned or worn, the contacts must be replaced.

In the course of inspecting contact condition, spring pressure should be checked. As contact surface wears down, spring pressure can be lost because of the overheating. Contact spring resiliency can usually be detected by fingertip pressure.

Check for faulty door gaskets especially when there are excessive deposits of foreign materials. Particular attention should be given to conductive deposits because they can cause flashovers and premature component failure when allowed to collect to any great extent. Either reposition or replace defective gaskets and clean the control cabinet.

CAUTION
• Avoid touching components until they have had time to cool. Some may still be hot.

Check all overload settings on motor controls. Check for loose wiring and tighten as required.

Cleaning

When cleaning a control cabinet, it is best to use a vacuum cleaner rather than compressed air. A vacuum cleaner removes rather than redistributes dust and dirt. Compressed air can damage and displace relay contacts and springs.

Maintenance Schedule

Periodic maintenance intervals shown may vary with load, speed, hours of daily operation, ambient temperature, humidity, etc. Intervals can be established by fairly frequent maintenance at first, then lengthen the intervals as justified by observation of need based on history. The following is based on five days per week, eight hours per day under normal conditions.

Daily

- Listen to everything for unusual noises or vibration.
- Visually inspect to see that conveyor sections are clear and free of debris.
- Check to see that all safety guards are in place.
- Check any oil leakage.
- Check any unusual noises or vibration.
- Check for loose bolts or parts.
- Check air filter bowls for accumulated water.
- Listen for air leaks.

Weekly

- Inspect bearings, gear reducers and motors for excessive noise or heat.
- Clean breather cap on gear motor (if used).
- Check operation of all electrical controls.
- Inspect motor mounting bolts.
- Check for proper PSI on air regulators.

WARNING	
	• Prohibit riding on conveyor by anyone. • Think before making any adjustments. It may prevent an injury. Remember, all moving components are potentially dangerous. • Protect yourself from unexpected starts when working on a stopped unit by locking and tagging the control panel or disconnect switch that supplies power to the unit.

Monthly

- Check air filters for cleanliness.
- Check coupler chains for cracks.
- Clean chains and sprockets and lubricate with SAE 30 weight oil or equivalent. (Check chain tension and tightness of all adjusting screws.)
- Check drive unit for leaking seals and oil level in gearcase (if applicable), unusual noises, vibration and stress cracks.
- Check drive belts for wear, cracks or breaks.
- Lubricate U-joints.

Semi-Yearly

- If dry sounding, lubricate unsealed bearings in rollers with light oil. Check free spin of rollers.
- Drain and flush gearcase after each 2,500 hours of normal operation or at least every six months (if applicable).
- Grease motor shaft bearings.
- Inspect and clean motor control centers.
- Grease regreasable bearings.

Yearly

- Change oil in gearboxes.
- Inspect tightness of all nuts and bolts on units. Readjust and, if necessary, retighten.
- Check for plumb and level. Shims have been known to vibrate out from under supports in isolated incidents.
- Touch up paint that has been chipped. Unpainted surfaces will rust.
- Inspect for stress/fatigue cracks in frame and supports.

CAUTION
• Check to confirm tools and foreign objects have not been left on or inside the conveyor. • Check to confirm all loosened parts have been retightened. • Check to confirm all guards have been installed.

Supports/Framework

Preventive maintenance for supports and framework should include the following periodic checks:

- Check for plumb and level. Shims have been known to vibrate out from under supports in isolated incidents.
- Check and retighten any bolts that may have come loose.
- Touch up paint that has been chipped. Unpainted surfaces will rust.
- Check for stress cracks or fatigue.

Universal Joints

Universal joints (U-joints) are primarily used to "bend" the line-shaft in the XP43/46 system, such as in merges, curves, and small incline and decline angles.

To ensure proper lubrication of all four bearing assemblies on U-joints, add lubricant until it appears at all journal cross bearing seals. This assures removal of dirt particles and other contaminants that may find their way into the bearings and indicates that the bearings are fully lubricated.

Do not assume that bearing cavities have been filled with new lubricant unless flow is noticed around all four bearing seals. For universal joint lubrication use a high quality extreme pressure (EP) grease recommended by lubricant manufacturers for U-joints should be used. Lithium soap base greases meeting National Lubricating Grease Institute (NLG) Grade 1 and Grade 2 specifications are preferred.

The grease should be pumped in slowly until a slight bead forms around the seals. This bead, in addition to acting as an indicator of adequate relubrication, provides additional protection against the entry of foreign matter.

Grease in the bearing prevents excessive wear of parts, protects needle races, needles, etc. from corrosion, and aids in heat dissipation within the bearing. Lubricate yearly.

WARNING	
	• As with all rotating machinery, the line-shaft, couplers and U-joints present the possible danger of entangling hair, fingers, jewelry or clothing. Never operate the conveyor without the guards in place.

Coupler Sprockets/Chains

Coupler sprockets and chains located at the ends of line-shafts transmit rotational power from the conveyor drive to all connecting intermediate beds. To check or service couplers, shut off and lock out power supply.

To provide access, remove necessary rollers. Visually inspect coupler chain for cracks or broken side links. If a coupler chain needs replacing, the coupler sprockets (line-shaft) probably need realigning.

Guide Posts

Guide posts are used in location stops, urethane belt transfers and some special devices. Visually inspect for damage (such as galling) and listen for squeaking. Lubricate with light oil if required.

Air Systems

The best preventive maintenance for any air operated device is clean air. Always be alert for air leaks anywhere in the system and correct promptly. Check all air line filter bowls for accumulated water and drain if necessary. Check for proper PSI settings on air regulators.

Monitor bowl drain every week. To manually drain the bowl, first remove the hose. Carefully turn knurled drain valve counterclockwise until you hear air escaping. Let all accumulated liquid drain and close by turning clockwise. Reconnect hose.

Remove and replace clogged filter elements as required by filter condition indicator. Indicator is mounted on top of the filter housing.

Repair Procedures

WARNING	
	• Do not perform maintenance on the conveyor until the start-up controls are locked out and cannot be turned on by any person other than the one performing the maintenance. If more than one member of a crew is working on the conveyor, EACH CREW MEMBER MUST HAVE A LOCK ON THE POWER LOCK OUT. The air pressure must be turned off to the work areas. Make sure personnel are clear of all conveyor equipment before restarting the system. Do not use gasoline or kerosene for cleaning. Use nonflammable solvent only.

Coupler Chains

If the coupler failed from torque fatigue, analyze the amount of conveyor driven from that coupler. Perhaps the drive load can be shared better with adjoining conveyors. If the coupler failed from line-shaft misalignment, this condition must be corrected before the new chain is installed. If corrective steps are not taken to address the cause of breakage, the replacement coupler chain will probably also fail. The set screws in coupler sprockets must be torqued to 13 ft-lbs.

Chain and Sprockets

Lubrication of roller chains is essential to effectively minimize metal-to-metal bearing contact of pin-bushing joints in the chain. Oil should be applied to outside and inside plate edges, since access to the pin-bushing area is possible only through clearances between the outside plates and the inside plates. Oil applied on the center line of the rollers cannot reach pin-bushing joints.

Temperature Degrees F	Recommended Lubricant
20 to 40	SAE 20
40 to 100	SAE 30
100 to 120	SAE 40
120 to 140	SAE 50

Chain drives should be protected against dirt and moisture. Oil supply should be kept free of contamination. A good grade of non-detergent petroleum base oil is recommended. Heavy oils and greases are generally too stiff to enter and fill the chain joints. The following table indicates the proper lubricant viscosity for various surrounding temperatures.

Inspection includes:

1. Lubrication check for dirt, grit, or chips and clean if necessary by soaking chain in nonflammable cleaning solvent.
2. Sprocket alignment (see following text)
3. Wear on the inner surfaces of the roller chain link plates.
4. Sprocket tooth wear.
5. Chain tension (see following text).
6. Set screw tightness (5/16-18 at 13 ft-lbs and 1/4-20 at 6 ft-lbs).

Sprocket alignment

1. Loosen sprocket.
2. Align loose sprocket to the other by laying a straight edge across their faces or along the chain.
3. Retighten the loose sprocket.

Chain tension

Chain should be checked for excessive slack, if the chain is running close to the tips of the sprocket teeth. This can be checked by lifting the chain away from the large sprocket, making sure the chain is in mesh with the sprocket teeth. Excess clearance is conclusive evidence that the chain has elongated in pitch and no amount of tension adjustment will keep it properly meshed with the sprocket teeth. Continued operation will quickly destroy the sprocket teeth which otherwise may be good. If the sprocket is still serviceable, replace the chain.

Tension adjustment

1. Loosen mounting bolts of tension.
2. Increase tension up to 1/2" of total slack (1/4" each way of center).
3. Turn adjusting bolts on gearbox plate or move gearbox in mounting slots until there is 1/2" total chain slack.
4. Retighten all bolts after checking alignment.

If chains have stretched so that above adjustments cannot be made, remove a link and reconnect. (If removal of one link makes the chain too short, add offset link and reconnect.)

If a chain should break or fail due to overload, neglect or accident, those portions of the chain which appear to remain intact are, in all probability, damaged and subject to early failure if continued in service. Replace the entire chain and sprockets.

Chain/sprocket replacement on line-shaft

1. Shut off and lock out power supply to area of required maintenance.
2. To provide access, remove necessary rollers.
3. Remove line-shaft guard.
4. Disassemble any components involved with the operation of the line-shaft, slave drive, chains, couplers, etc.
5. Remove chain with roller chain pin extractor.
6. Unbolt the bearing housings from the crossmembers.

CAUTION
• The line-shaft will fall unless supported or held.

7. With line-shaft removed, loosen the eccentric cam collars and coupler chain on the side closest to the sprocket to be removed.
8. Remove all components up to the sprocket being replaced.
9. Loosen set screws on sprocket and remove.
10. Place new sprocket on shaft with keyway aligned and key installed.
11. Remount line-shaft to conveyor bed and properly align sprockets with straight edge against the face of both sprockets.
12. Tighten set screws to specification.
13. Reassemble all components in reverse of disassembly.
14. Reassemble coupler chain around coupler sprockets.
15. Double check tightness of all fasteners.
16. Properly tension chain.
17. Recheck alignment of sprockets.
18. Reinstall chain guard.
19. Reinstall line-shaft guard.

Universal Joints

U-joints are primarily used to "bend" the line-shaft in the XP43 system both horizontally and vertically. They are used in curves, diverter spurs, merges and small incline or decline angles.

To ensure proper lubrication of all four bearings, pump lubricant slowly until it appears as a slight bead at all journal cross bearing seals. This assures removal of dirt particles and other contaminants that may find their way into the bearings and indicates that the bearings are fully lubricated. In addition this provides additional protection against the entry of foreign matter.

Grease in the bearing prevents excessive wear of parts, protects ball races, balls, etc. from corrosion, and aids in heat dissipation within the bearing.

Disassembly/assembly procedure as follows:

1. To provide access to maintenance area, remove necessary rollers.
2. Remove line-shaft guarding in area requiring maintenance.
3. Loosen set screws on the universal joint and remove from shaft.
4. Replace universal.
5. Reverse above procedures for assembly.
6. Torque 3/8-16 set screws to 23 ft-lbs – see Universal Joint "phasing".

Line-shaft Bearings (standard)

Line-shaft bearings have dual set screws torqued to 95 in-lbs to secure the bearing inner race bore to the line-shaft. After one week of constant operation, check each bearing to see that the set screws are tight. Recheck every six months.

To replace any worn or damaged bearings, the drive shaft must be removed from the conveyor. Follow the same procedures as sprocket replacement. Any burrs caused by locking set screws should be removed before sliding bearings or spools off the drive shaft.

Before reassembly the line-shaft must be cleaned. Be sure the shaft is dry before reinstalling bearings and spools.

WARNING	
	• REINSTALL ALL GUARDS. As with all rotating machinery, the line-shaft, couplers and U-joints present the possible danger of entangling hair, fingers, jewelry or clothing.

Line-shaft

During manufacturing processes line-shafts are left with a light coating of lubricant. Excess is wiped off before the assembly of components onto the line-shaft. A certain amount of lubricant is needed to prevent formation of rust before the conveyor is put in use. Under normal conditions this has no detrimental effects. However, on rare occasions some rollers may have reduced drive capacity due to excessive lubricant remaining after assembly or due to a localized spill.

To get access to the line-shaft, a spacer must be cut off. A solvent containing no lubricant, which does not harm plastic or urethane, and dries without leaving film, must be used. Success has been found with some brake cleaners, isopropyl alcohol and certain CRC electrical contact cleaner products.

Use the cleaner liberally while shifting the pulleys back and forth on the line-shaft with the drive belts removed. The solution must run out to properly flush. The removed spacer can be placed back on the shaft. Make sure the belt twist is correct when placing the drive belts back on the rollers.

Reducers/Gearmotors

Units are properly filled at the factory with sufficient lubrication for desired mounting position. With "Relialube," the break-in period and subsequent oil change ordinarily experienced with conventional reducers has been eliminated.

With Reliance Relialube reducers, change oil only when performing maintenance that requires gearbox disassembly. In this case, use only Mobil SHC-634. If possible return to Reliance service center for repairs.

<u>Disassembly/assembly procedure as follows:</u>

1. To provide access to maintenance area, remove necessary rollers.
2. Disconnect drive chain from line-shaft drive sprockets using roller chain extractor tool.
3. Disconnect any electrical connection.
4. Remove reducer or gearmotor.
5. Perform required maintenance.
6. Reverse procedures for assembly.
7. After all fasteners are tight, double check chain tension and sprocket alignment.
8. Replace all guards.

<u>Regularly inspect all gearbox reducers to guarantee maximum performance:</u> (see Lubrication Guide)

1. Tightness of bolts and screws
2. Correct alignment of shaft and couplings
3. No major oil leaks
4. No excessive heating
5. No unusual vibration or noise

Enclosed gear drives (except those tagged as pre-lubricated) require filling to the proper oil level before operating as indicated. Equivalent lubricants should conform to AGMA Standard Specification No. 250.03 applying to the AGMA Lubricant Number indicated for the required ambient range. Service life and efficiency of gears and bearings will be affected by oxidation or contamination of oil used. Improved performance will be obtained by periodic lubrication at regular intervals of approximately 2,500 hours of operation or six months, whichever comes first. See Lubrication Guide.

WARNING	
	• Do not perform maintenance on the conveyor until the startup controls are locked out and cannot be turned on by any person other than the one performing the maintenance. • If more than one member of a crew is working on the conveyor, EACH CREW MEMBER MUST HAVE A LOCK ON THE POWER LOCK OUT. • The air pressure must be turned off to the work area. All pneumatic devices must be de-energized to prevent accidental cycling of the device. • Make sure personnel are clear of all conveyor equipment before restarting the system.

Drive Belts

When it becomes necessary to replace a XenoROL drive belt, there are choices depending on the situation. New original manufactured belts are the best and will last the longest. Replacement belts with hook connections require only the removal of a roller to install. Making belts by heat welding a length of cord stock requires special tools and techniques.

<u>When replacing all belts, only use original type belts with the following procedure</u>
Disassembly/assembly procedures (original belts):

1. Remove all rollers.
2. Remove the line-shaft guarding.
3. Remove coupler chains at both ends.
4. Unbolt the line-shaft bearings from the conveyor crossmembers, then lower line-shaft carefully.
5. Place new belts over the line-shaft assembly. If spares are included, they must be secured with tie straps to the spacers. Do not tighten tie to cause belt compression or distortion or it will not be usable in the future.
6. Reassemble the line-shaft by bolting the line-shaft bearings to the crossmembers.
7. Realign adjoining coupler sprockets.
8. Attach coupler chains. (See installation of coupler chains.)
9. Be aware of the drive belt's twist direction for proper conveying direction. Twist belt onto roller's groove and reassemble roller into conveyor bed.

<u>When replacing a few belts in a specific location, use original type belts with the following procedures</u>

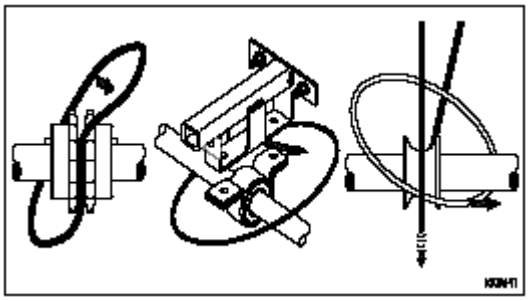

1. Remove rollers receiving new belts.
2. Remove the line-shaft guard.
3. Remove the coupler chain closest to the replacement area.
4. Remove the bolts holding line-shaft bearings between the coupler and replacement area.
5. Pass the belt between the coupler sprockets.
6. Pass belts over the line-shaft bearings.
7. Pass the belts through all connected belts by turning the roller while pulling the belt through.
8. With the new belts in their respective pulleys, reassemble bearing and couplings.

In an emergency the belts may be replaced by cutting and splice welding a new length belt from cord stock using the following procedure

1. Preheat the iron with the adjustment knob at approximately the three-fourths setting for a couple of minutes.
2. Feed new length of belt around line-shaft.
3. Holding one end of the belt in each hand, place the ends against each side of the heating surface and thoroughly soften both ends making sure melted material appears around the entire perimeter of the splice.
4. Remove from iron and match cord, end to end.
5. Hold firmly together until the joint solidifies.
6. When belt is cool, trim the flashing from around the welded joint. Twenty minutes cooling time is recommended before reconnecting to the roller.
7. Be aware of the orientation of roller drive belts for conveying direction. Twist belt onto roller groove and reassemble roller into conveyor bed.
8. To reassemble the roller into conveyor frame, lay the roller on the frame with the grooved end over the line-shaft. After placing the belt over the roller with the correct twist, put the axle on the line-shaft side into its hex hole. Align the axle with the hex hole on the opposite side/frame and depress axle with a blunt object. Push the roller downward into frame until axle snaps into hex hole in side channel.

WARNING	
	• Use a blunt object to depress roller axles. If a screwdriver or similar pointed tool is used and slips, it could cause injury to the installer.

Replacement Parts

NOTE

To order replacement parts, a $25 net minimum order is required.

XP43 Bed

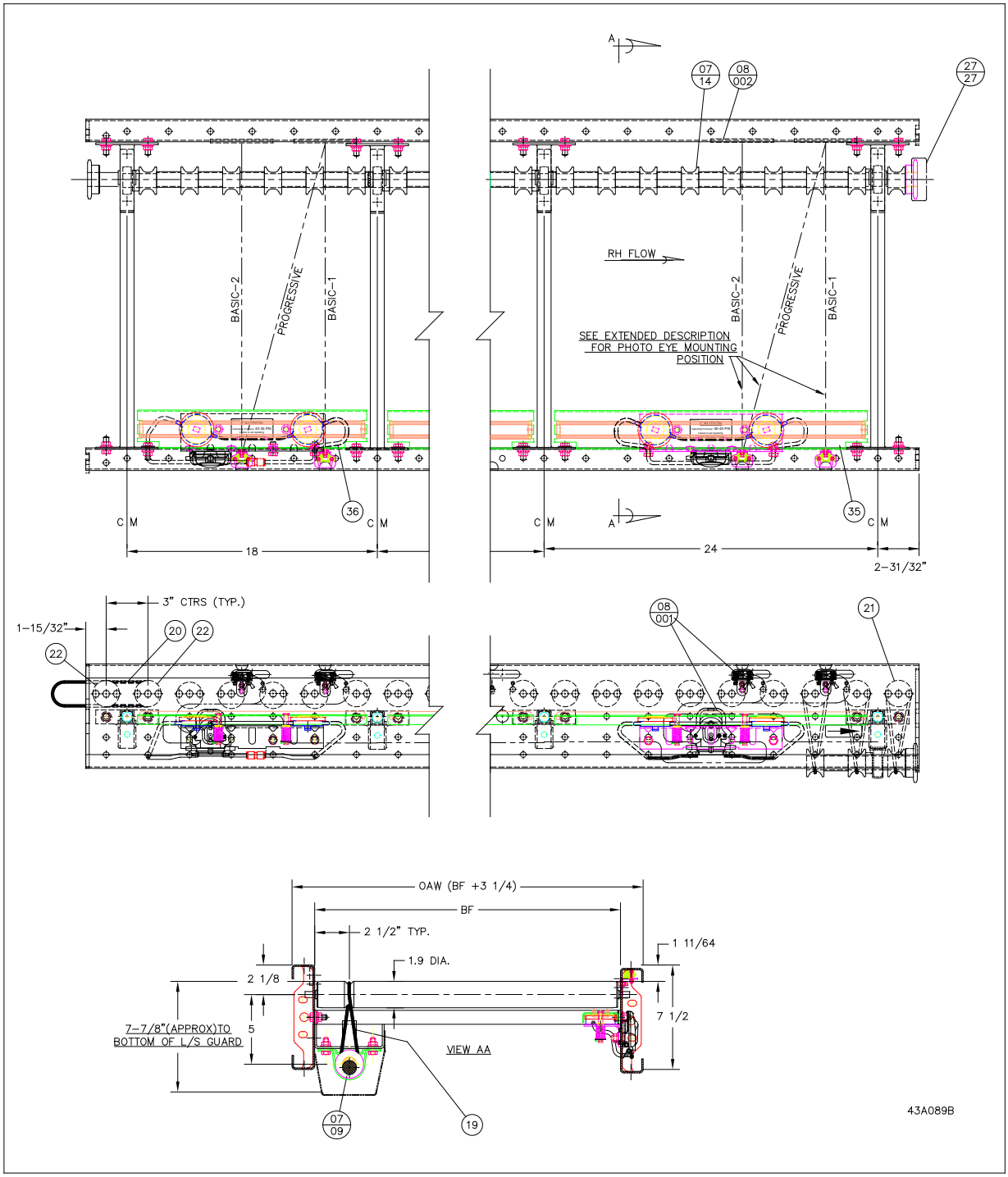

Reference Dwg 43A089B
Description: Bed,_XP43CZ-3I/D_24 RH/LH-10' GENII

REPLACEMENT PART NUMBERS FOR RH XP43CZ					
Balloon	Description	Width			
		18 XP	24 XP	30 XP	36 XP
07/ 009	1" BORE PRECISION BEARING	90050103			
07/ 014	1" BORE DRIVE PULLEY	90801200			
08/ 001	PHOTO EYE VALVE (Normally Open -- Air-to-Brake	1114947			
09/ 001	PHOTO EYE REFLECTOR	400004			
19	3/16" x 13-1/2" O-RING	90530009			
20	3/16" x 9-15/16" O-RING	90530005			
21	1.9" DIA. PLATED ROLLER (PRECISION BEARING	4E+07	4E+07	4E+07	4E+07
22	1.9" DIA. PLATED ROLLER (PRECISION BEARING	4E+07	4E+07	4E+07	4E+07
27/ 027	CHAIN COUPLER	90140025			
35 & 36	BRAKE	SEE BRAKE ZONE CHART			

Bed Reference Dwg. #43A089B

BRAKE ZONE REPLACEMENT PART NUMBERS					
Balloon	Description	Zone Lengths			
		18	24	30	36
35 & 36	BRAKE	1129738 18" Zone	1129740 24" Zone	1129490 30" Zone	1129491 36" Zone
	BRAKE (RIGHT HAND DOUBLE PUCK)	1129753 12" Brake			
	BRAKE (LEFT HAND DOUBLE PUCK)	1129754 12" Brake			

XP43 Drive Train

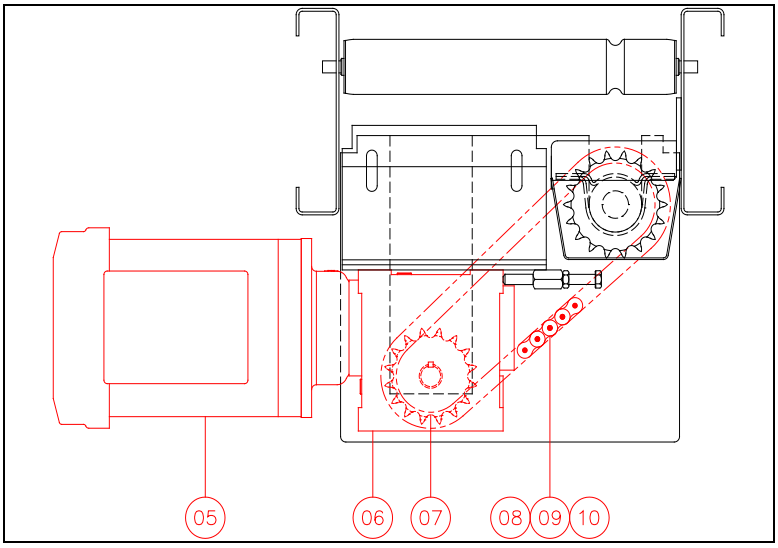

Reference Dwg 44A033C
Description: DR,CTR_CZ-_-RH/LH

REPLACEMENT PART NUMBERS FOR XP43 CENTER DRIVE, DRIVE TRAINS

DRAWING BALLOON		05	06		BELT DRIVEN 07	BELT DRIVEN 07	BELT DRIVEN 08	CHAIN DRIVEN 07	CHAIN DRIVEN 08	CHAIN DRIVEN 09	
FPM	**HP**	**MOTOR**	**REDUCER**	**REDUCER SIZE**	**DRIVE PULLEY**	**DRIVEN PULLEY**	**BELT**	**DRIVE SPROCKET**	**DRIVEN SPROCKET**	**CHAIN**	**MASTER LINK**
30	3/4	90480111	90655044 1/HP/20:1	17/56	**NOT AVAILABLE**			90800530 16-TOOTH 7/8" BORE	90800542 18-TOOTH 1" BORE	90140029	90440106
	1	90480116									
	1.5	90480120	90655018 2HP/20:1	26/56				90800532 16-TOOTH 1-1/8" BORE			
45	3/4	90480111	90655042 1HP/15:1	17/56	90800845 40-8M	90800836 40-8M	90050800 (HPR) 800-8M	90800530 16-TOOTH 7/8" BORE			
	1	90480116			**NOT AVAILABLE**						
	1.5	90480120	90655038 1HP/15:1	26/56				90800539 18-TOOTH 1-1/8" BORE			
60	3/4	90480111	90655010 1.5HP/10:1	17/56	90800831 36-8M	90800836 40-8M	90050800 (HPR) 800-8M	90800530 16-TOOTH 7/8" BORE			
	1	90480116									
	1.5	90480120			**NOT AVAILABLE**						
	2	90480127	90655011 3HP/10:1	26/145				90800532 16-TOOTH 1-1/8" BORE			
75	3/4	90480111	E0005260 2HP/7.5:1	17/56	90800839 34-8M	90800836 40-8M	90050800 (HPR) 800-8M	90800523 15-TOOTH 7/8" BORE			
	1	90480116									
	1.5	90480120									
	2	90480125			**NOT AVAILABLE**						
90	3/4	90480111	E0005260 2HP/7.5:1	17/56	90800845 40-8M	90800836 40-8M	90050800 (HPR) 800-8M	90800541 18-TOOTH 7/8" BORE			
	1	90480116									
	1.5	90480120									
	2	90480125			**NOT AVAILABLE**						
120	3/4	90480111	90655006 2HP/5:1	17/56	90800831 36-8M	90800836 40-8M	90050800 (HPR) 800-8M	**NOT AVAILABLE**			
	1	90480116									
	1.5	90480120									
	2	90480125									
150	3/4	90480111	90655006 2HP/5:1	17/56	90800821 32-8M	90800822 28-8M	90050720 (HPR) 720-8M				
	1	90480116									
	1.5	90480120									
	2	90480125									
180	3/4	90480111	90655006 2HP/5:1	17/56	90800833 38-8M	90800822 28-8M	90050720 (HPR) 720-8M				
	1	90480116									
	1.5	90480120									
	2	90480125									

Drive-Train Reference Dwg. # 44A033C

Lubrication Guide

Item	Use	Recommended Lube
Chain Drives	Drives, External & Internal Jump Chains & Slave Drives	Mineral oil, SAE 30
C-Face Speed Reducers	Drive packages using Reliance Relialube reducers Drive packages not using Reliance Relialube reducers	Mobil SHC-634 for gearbox. For input bore and motor shaft use Fel-Pro C5A Anti-Seize or MobilTemp 78 Grease. AGMA Lubricant No. 4 or 4EP; Viscosity Range (SSU at 100° F) 626 to 765; ISO Viscosity Grade No. 150, Standard Specification 205.03
Guide Posts	Lift Table (Urethane Belt Transfer)	Light machine oil, SAE10
Rollers	Product support and driving rollers	Light machine oil, SAE10
Universal Joints	Curves, merges, diverters, incline/decline	Extreme Pressure (EP) Grease with Lithium Soap Base meeting NLG1 Grade 1 and 2

Troubleshooting Guide - Mechanical

Mechanical Problem	Possible Cause	Remedy
Insufficient drive	Not enough rollers being driven	Drive more rollers if available
	Poor bottom on product	Improve product conveyability or install drive belts with right tension
	Overloading of product	Remove overload
	Lubricant on belts, rollers or drive spools	Clean belts, rollers and spools. Spray electrical contact cleaner.
	Weak drive belts	Replace belts
	Drive belt interference with structure	Locate and correct interference
Rollers not turning/turning slowly	Weak belts	Replace belts
	Faulty bearing in rollers	Replace rollers affected
	Interference with roller or belt	Locate and correct interference
	Bent roller	Replace roller
Broken belt	Belt rubbing on interference	Make clearance, then replace belt
	Age (Flex life)	Replace belt
Weak belts	Reaction to chemical	Correct cause
	Excessive temperature	Replace with high temperature belt
	Ultraviolet rays (sun)	Replace belt with UV blocker type
Belt out of groove	Drive pulley location	Move pulley to reduce belt angle on groove input side
	Groove mislocated on roller	Replace roller
Vibration in frame (slight side-to-side movement of frame is normal)	Misalignment in bearings	Loosen bearing and readjust shaft
	Structural frequency	Brace conveyor frame. Add diagonal sway brace to support. Change speed 20 FPM up or down.
	Bent shaft	Replace shaft
	Misalignment in coupling	Realign coupling
	Universals out of phase	See Phasing – Universals
Roller pulsation after curve or merge	Angle or alignment of universals not equal	Readjust universals

Pulsating Effect of Powered Curves

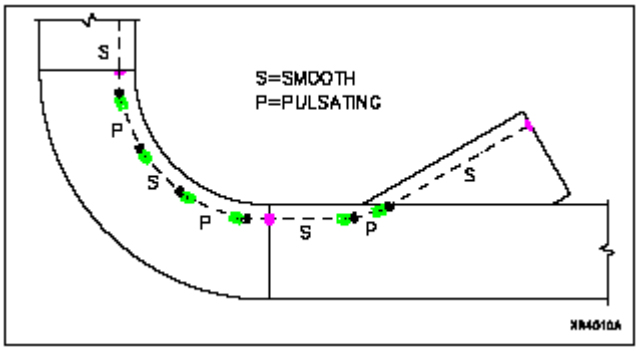

During the operation of the powered curves, a slight pulsating or jerking effect may be noticed in the rollers driven from that portion of the line-shaft connecting each pair of universal joints (U-joints). This is caused by the intermittent speedup and slowdown effect of U-joints. Pulsing is most noticeable as U-joints approach operation at 30 degrees (as in a 60 degree curve) and virtually unnoticeable as the U-joints approach operation at 0 degrees. This pulsating has NO detrimental effect on the performance of the powered curve. The pulsating effect of one universal joint is eliminated by the reverse effect of the other, provided they are in phase. (See Phasing below.)

Phasing – Universal Joints

When connecting U-joints in XenoROL merges, inclines or declines, be sure that the U-joints are installed in phase. To be in phase, both U-joints must be identically situated in-line (symmetrical) on the connecting shaft, have equal angles and in the same plane.

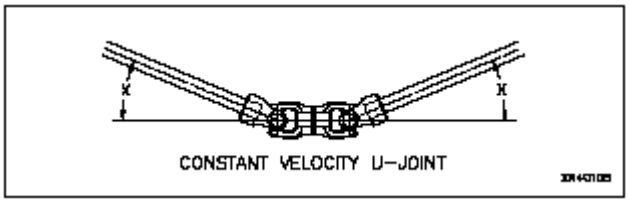

Both ends of a constant velocity U-joint must be at the same angle to be phased properly.

If more than one line-shaft bed separates the U-joints, align the U-joints before installing the last coupler chain. If all line-shaft keyways are aligned, then the universal joints will automatically be in phase.

To be in phase requires:

1. Equal angles
2. Same plane
3. Shaft keyed in-line (symmetrical) with both ends of connecting line-shaft.

Since U-joints are common and basic to the operation of XenoROL, they are taken for granted. However, if they are not applied or installed correctly, they can cause major problems. The effect of improperly installed U-joints can also have detrimental effects on other components besides the U-joint itself.

When a pulsing shaft is connected by a coupler on an incline/ decline, we have potential phasing problems. The U-joint MUST be in line before installing the last coupler chain. No drive may be located between a pair of U-joints, unless they are constant velocity. No jump chain other than 1:1 ratio may be located between a pair of standard U-joints.

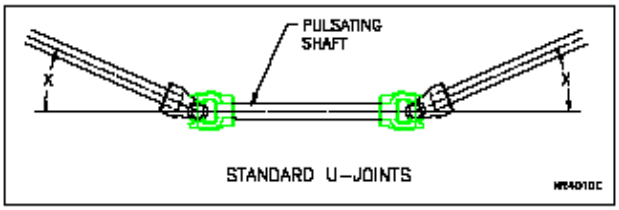

WARNING	
	• U-joints used in curves can be dangerous. The curve line-shaft guards and U-joint covers are installed at the factory and must always be in place when operating the conveyor.

Troubleshooting – Motor/Reducer

Motor reducer problem	Possible cause	Remedy
Reducer running excessively hot	Low reducer oil level	Check oil level in gearcase and be sure breather plug is open (non Relialube reducers)
	Drag on conveyor	Check and inspect all bearings on conveyor
		Check for excessive product load
		Check all rollers for free rotation
Reducer or motor noisy	Insufficient reducer lubricant on motor shaft bearing	Add recommended oil to gearcase
	Damaged gears	Replace unit
	Output shaft or chain rubbing chain guard	Adjust guard
	Bent fan housing	Repair or replace part
	Worn brushes	Repair or replace part
	Worn bearing	Repair or replace part
Repeated motor stalling	Electrical	Check circuits and panel
	Motor wiring	Check heater size and amp draw
		Check motor wiring
	Drag on conveyor	Check all bearings
Drive slow to start	Electrical	Check circuits and panel
		Take ampere reading
Motor will not start	No line voltage	Check fuses and wiring for open circuit; check overload protection device and reset; check limit switches, starter and relays for faulty contacts or mechanical fault; check for voltage at source
	Low line voltage	Check control circuit voltage
		Check for low resistance short on line
	Conveyor jammed	Check for foreign material in chain and sprockets
	Burned out or shorted stator windings	Replace motor with spare and send defective motor to authorized repair station
	Failure of photo electric control	Check photo electric control
Motor will run but reducer output shaft does not turn	Worn worm gear in reducer	Replace reducer with spare and send defective reducer to authorized repair station

Motor reducer problem	Possible cause	Remedy
	Input shaft key missing or defective	Replace key
Reducer oil leakage (non-Reliance Relialube)	Overfilling	Drain lubricant to proper level
	Vent in wrong location	Place vent in uppermost position
		Extend vent with pipe nipple
	Defective oil seals on output shaft	Tighten all bolts and fittings
		Install new oil seals
Motor overload protectors kicking out	Incorrect size	Check overload size and replace if necessary
	Short in motor	Replace motor
Motor runs, line-shaft does not turn	Drive chain broken or disconnected	Replace chain (see page 58)
	Sprocket loose	Install key, tighten set screws and check line-shaft for wear
Starter overloads kicking out	Wrong size overloads	Check proper size and replace
	Excessive amps being pulled	Reset starter and check amp draw
	Motor too small	Replace motor within size limits for conveyor speed
	Defective motor	Repair or replace motor
	Overloaded conveyor	Check for excessive product

Troubleshooting Guide – Mechanical

Mechanical Problem	Possible Cause	Remedy
Line-shaft bearing noisy	Misaligned line-shaft	Temporarily loosen noisy bearing plus bearing on each side, start motor, stop and retighten
Product over XP43 brake will not hold	Inadequate air pressure	Air pressure to 40-45 PSI
	Blown air diaphragm	Remove brake and replace air diaphragm
	Major air leak	Find and repair air leak
	Tubing not contacting all rollers	Loosen brake mount bolts and level the brake
	Light product	Use plastisol-coated rollers for additional friction
Bearing housing turning in roller shell	Insufficient swedging pressure	Tack weld outer bearing flange to shell
	Press fit not tight	Use industrial strength adhesive (like “Locktite” 609)
		Replace roller
Roller will not fit in frame	Crossmember too short	Shim crossmember at frame
	Frame bent	Straighten frame or replace
	Roller too long	Replace roller with shorter one
Excessive sprocket wear	Loose chain	Tighten chain
	Misalignment	Check alignment with straight edge along side of chain
	Dry chain	Lubricate on proper intervals
Nonsymmetrical wear on sprockets or rollers	Connected shafts not parallel	Realign shafts
Wear on inside of roller plates or side of sprocket teeth	Sprockets offset on shaft (misaligned) or out of parallel	Realign sprockets
Wear on tips of sprocket teeth	Chain elongated excessively	Replace chain
	Loose chain	Tighten chain
Broken chain parts, sprocket teeth	Drive overloaded	Avoid overloading
	Excessive slack causing chain to jump teeth	Periodically adjust tension
	Foreign object caught in chain	Remove object and prevent entry
	Inadequate lubrication	Maintain proper lubrication intervals

Mechanical Problem	Possible Cause	Remedy
Excessive chain noise	Chain contacting stationary parts	Remove interference
	Worn sprockets or chain	Replace both
	Inadequate lubrication	Maintain proper lubrication intervals
	Broken or missing chain rollers	Repair or replace chain
	Sprockets misaligned	Align and tighten all fasteners
	Check shaft and sprocket alignments	Realign
	Insufficient chain tension	Adjust tension
	Chain jumping sprocket teeth	Adjust chain tension, check for wear
Excessive vibration	Broken or missing chain roller	Replace chain and sprockets
	Broken sprocket teeth	Replace chain and sprockets
Pulsing chain	Insufficient chain tension	Reposition drive sprocket shaft
	Misalignment of chain guard	Align sprockets and chain guard
	Overload	Adjust guard as appropriate Inspect for obstruction to or drag on conveyor
Broken chain	Drive overload	Avoid overloading Reduce unit length
	Frozen bearing on sprocket shaft	Inspect for damaged bearings and replace as necessary
	Worn or damaged chain	Replace chain as required
	Obstruction or jam	Remove obstruction to clear jam
	Very dry chain	Use lubrication schedule
	Rusty chain	Remove source of corrosion or use noncorrosive chain; increase lubrication schedule
Sprocket loose on shaft	Loose set screws	Realign sprockets and tighten set screws
	Worn or damaged keyway	Replace with new key
Excessive slack	Normal wear	Expect rapid chain growth in first two weeks of operation – reposition sprocket shaft; align sprockets and tighten down drive

Mechanical Problem	Possible Cause	Remedy
Chain climbs on sprocket	Improper chain/sprocket alignment	Realign sprockets
	Material build-up in sprocket teeth	Clean sprocket and readjust chain
Broken coupler chain	Improper chain installation	Replace chain
	Misalignment of line-shaft and sprockets	Realign shafts and sprocket gap
XP43 brake not dropping completely away from roller	Brake located too high in frame	Loosen mounting bolts to finger tight. Actuate brake, retighten mounting bolts while actuated. This will align the brake assembly with the bottom surface of the rollers and bottom mounting bolts in the frame holes.

Mission

To meet or exceed all customer expectations by providing the highest quality products and services, on time, at exceptional value, in an environment which promotes safety and personal development.

MHS Conveyor
1300 E Mount Garfield Road
Norton Shores MI 49441-6097 USA
231.798.4547
Email: us-info@mhs-conveyor.com
Web Site: mhs-conveyor.com

Regional sales offices and authorized Business Partners located throughout the United States and Canada.
Licensees and Business Partners in Europe, South America and Southeast Asia.