INSTALLATION, OPERATION, MAINTENANCE MANUAL

MHS | CONVEYOR

CRUZ®belt

PN: E0032544

Revision Date: April 24, 2017

Contents

Chapter 1: IOM Introduction 6
1.1 Purpose 6
1.2 Manual Structure 7
Chapter 2: MHS Conveyor Policies 8
2.1 MHS Conveyor Equipment Warranty 8
2.2 MHS Conveyor Environment Standards 9
Chapter 3: Safety 10
3.1 MHS Conveyor Safety Recommendation 10
3.2 Conveyor Design and Safety Guidelines 11
3.3 ANSI Standards for Conveyors 12
3.4 CEMA Standards for Conveyor 13
3.4.1 CEMA Unit Handling Standard 14
3.4.2 CEMA Poster for Package Conveyor 15
3.5 Warnings and Safety Instructions 16
3.5.1 Safety Warnings 17
3.6 MHS Conveyor Controls Safety Guidelines 19
Chapter 4: CRUZbelt Introduction 21
4.1 CRUZbelt Features 21
4.2 Definition of Terms 22
4.3 Product Description Examples 24
Chapter 5: CRUZbelt Receiving & Site Preparation 25
5.1 Part Inventory & Identification 26
Chapter 6: CRUZbelt Application & Installation Details 27
6.1 General Procedures 27
6.2 Electrical / Gearmotor 28
6.3 Gear Motor Activation 31
6.4 Squaring Conveyor 33
6.5 Elevations 34
6.6 Support Arrangements 35
6.7 Ceiling Hanger Installation 37
6.8 Anchoring Ceiling Hangers 40
6.9 Empty Carton Conveyors 6” Guard Rail Kit 42
6.10 Empty Carton Conveyors 18” Guard Rail Kit 43

6.11 Belt Material 44
6.12 Conveyor Set Up 46
6.13 Standard CRUZbelt Lacing 48
6.14 Belt Tracking 51
6.14.1 Tracking scenarios 52
Chapter 7: CRUZbelt Merge 54
Chapter 8: CRUZbelt & Strip Belt Spur 56
Chapter 9: CRUZbelt Commissioning of Equipment 58
Chapter 10: CRUZbelt Preventive Maintenance & Troubleshooting 59
10.1 Belt Troubleshooting Guide 62
10.2 Gearmotor Troubleshooting Guide 64
10.3 Chain & Sprocket Troubleshooting Guide 66
10.4 Bearings Troubleshooting Guide 66
Chapter 11: CRUZbelt Replacement Parts Identification 67
11.1 Spare Parts Priority Level Explanations 67
11.2 CRUZbelt Intermediate Bed – Belt On Roller 68
11.2.1 CRUZbelt Intermediate Bed 68
11.3 CRUZbelt End Beds - Belt On Roller 69
11.3.1 CRUZbelt End Beds 69
11.4 CRUZbelt Center Drives - Belt On Roller 70
11.4.1 CRUZbelt Center Drives (BOR) 70
11.5 CRUZbelt Merge Drive Bed 71
11.5.1 CRUZbelt Merge Drive 71
11.6 CRUZbelt Drive Train 72
11.6.1 CRUZbelt RH & LH Center Drive Trains Chain Driven 73
11.6.2 CRUZbelt Timing Belt 74
11.6.3 CRUZbelt Mount plate 75
11.7 CRUZbelt End Drive 76
11.7.1 CRUZbelt End Drive & Drive Train Replacement Parts 76
11.7.2 CRUZbelt Drive Train ITEM # Replacement Parts 77
11.8 CRUZbelt Intermediate Slider Bed 78
11.8.1 CRUZbelt Intermediate Slider Bed 78
11.9 CRUZbelt Slider End Bed 79
11.9.1 CRUZbelt Slider End Bed 79

11.10 CRUZbelt Slider Center Drive 80
11.10.1 CRUZbelt Slider Center drive 80
11.11 CRUZbelt Intermediate Noseunder Bed 81
11.11.1 CRUZbelt Noseunder 81
11.12 CRUZbelt Noseunder End Bed 82
11.12.1 CRUZbelt Noseunder End Bed 82
11.13 CRUZbelt Intermediate Noseover Bed 83
11.13.1 CRUZbelt Intermediate Noseover Bed 83
11.14 CRUZbelt Noseover End Bed 84
11.14.1 CRUZbelt Noseover End Bed 84
11.15 CRUZbelt Empty Carton Slider Noseover 85
11.15.1 CRUZbelt Slider Noseover 85
11.16 CRUZbelt Empty Carton Conveyor (Slider) Double Snubber 86
11.16.1 CRUZbelt Double Snubber (ECC Only) 86
11.17 CRUZbelt 4 Brake Meter & Induction Bed 87
11.17.1 CRUZbelt 4 Brake Meter Induction Beds 87
11.18 CRUZbelt Brake Meter & Induction Bed Drive-Train 88
11.18.1 CRUZbelt Induction Bed 2:1 Reduction Drive-Train 89
11.18.2 CRUZbelt Induction Bed 1.5:1 Reduction Drive-Train 90
11.19 CRUZbelt 4 Induction Bed 91
11.19.1 CRUZbelt 4 Single Induction Beds 91
11.20 CRUZbelt 4 Induction Drive-Train 92
11.20.1 CRUZbelt 4 Induction Drive-Train 93
11.21 CRUZbelt 4 Center Drive (CDR) 94
11.21.1 CRUZbelt 4 Center Drives 94
11.22 CRUZbelt 4 CDR Drive-Train 95
11.22.1 CRUZbelt 4 CDR Drive-Trains 96
11.23 CRUZbelt 4 End Drive 97
11.23.1 CRUZbelt 4 Slider Bed End Drive & Drive Train 98
11.23.2 CRUZbelt 4 Slider End Drive & Drive Train 99
11.24 CRUZbelt Strip Belt Spur 100
11.24.1 CRUZbelt Strip Belt Spur 101
11.25 CRUZbelt Spur Drive Train 102
11.25.1 Strip Belt Spur Drive Train 103

Works Cited 104
MHS Conveyor Information 105

Chapter 1: IOM Introduction

1.1 Purpose

It is the intent of MHS Conveyor, through this manual, to provide information that acts as a guide in the installation, operation, and maintenance of MHS Conveyor CRUZ®belt conveyors**.**

This manual describes basic installation practices, assembly arrangements, preventive maintenance, and assists in replacement parts identification.

This service manual is intended for use by personnel who are knowledgeable of installation and safe working practices on conveyor systems.

Not all applications and conditions can be covered; therefore, this manual is to be used ONLY as a guide.

If additional copies of this manual are needed or if you have any question concerning the conveyor please contact your MHS Conveyor Distributor or MHS Conveyor Lifetime Services at 231-798-4547 or Fax 231-798-4549. Visit MHS Conveyor at mhs-conveyor.com.

Visit MHS Conveyor website at mhs-conveyor.com for maintenance videos and other application information.

1.2 Manual Structure

You s h o u l d receive separate documentation for each product line of MHS Conveyor implemented in your installation. You can identify the respective product line on the back of the folder or on the cover sheet of the IOM (Installation Operation Maintenance) manual.

- IOM Product Name
- IOM PN = Part Number
- Revision Date (MM/DD/YYYY)
- Page Numbers

⚠ WARNING	
	• Pay attention to the safety instructions! • Prior to working at or in the immediate vicinity of the system it is recommended that you make yourself familiar with the safety instructions included in the present document!

Chapter 2: MHS Conveyor Policies

2.1 MHS Conveyor Equipment Warranty

MHS Conveyor warrants that the material and workmanship entering into its equipment is merchantable and will be furnished in accordance with the specifications stated.

MHS Conveyor agrees to furnish the purchaser without charge any part proved defective within 2 years from date of shipment provided the purchaser gives MHS Conveyor immediate notice in writing and examination proves the claim that such materials or parts were defective when furnished. For drive components specific to XenoROL® (i.e. Xeno belts, slave Xeno belts, drive spools, standard and speed-up, and spacers), this warranty shall be extended to five years of running use, provided the conveyors are applied, installed and maintained in accordance with MHS Conveyor published standards. Other than the above, there are no warranties which extend beyond the description on the face hereof. Consequential damages of any sort are wholly excluded.

The liability of MHS Conveyor will be limited to the replacement cost of any defective part. All freight and installation costs relative to any warranted part will be at the expense of the purchaser. Any liability of MHS Conveyor under the warranties specified above is conditioned upon the equipment being installed, handled, operated, and maintained in accordance with the written instructions provided or approved in writing by MHS Conveyor.

The warranties specified above do not cover, and MHS Conveyor makes no warranties which extend to, damage to the equipment due to deterioration or wear occasioned by chemicals, abrasion, corrosion or erosion; Purchaser's misapplication, abuse, alteration, operation or maintenance; abnormal conditions of temperature or dirt; or operation of the equipment above rated capacities or in an otherwise improper manner.

THERE ARE NO WARRANTIES, EXPRESSED OR IMPLIED, INCLUDING, BUT NOT LIMITED TO, WARRANTIES OF MERCHANTABILITY OR FITNESS FOR A PARTICULAR PURPOSE, EXTENDING BEYOND THOSE SET FORTH IN THIS STATEMENT OF WARRANTY.

Rev 9/23/2016

2.2 MHS Conveyor Environment Standards

MHS Conveyor equipment is designed to be installed in a clean, dry warehouse environment. Exposure to extreme humidly, direct sunlight, blowing dirt or rain can permanently damage some components of MHS Conveyor. In particular, the curing agents in concrete are known to attack and degrade the urethane conveyor components.

When installing conveyor on a new construction site, be sure that the concrete is properly cured before setting conveyor on it. In addition, if conveyors are stored in the proximity of curing concrete, proper ventilation must be used to direct the curing agent fumes away from the conveyor.

Failure to comply with these guidelines will void the MHS Conveyor warranty on any failed components that result from these environment issues.

Chapter 3: Safety

3.1 MHS Conveyor Safety Recommendation

For additional safety information: MHS Conveyor agrees to the following safety instruction or guidelines listed within this manual. This is not to conflict with your state or legal requirements.

MHS Conveyor Recommends for maintenance or repair purposes, to incorporate a lock out or tag procedure. To ensure all starting devices, prime movers, or powered accessories are off before attempting to maintenance or repair.

The procedures below are designed to protect everyone involved with the conveyor against an unexpected restart. To include understanding of potential hazard of stored energy, which can exist after the power source is locked out.

For additional information, refer to the latest issue of ANSI Z244.1, American National Standard for Personnel Protection − Lockout/Tagout of Energy Sources− Minimum Safety Requirements. http://www.ansi.org/

OSHA 29CRF Part 1910.147 *"Control of Hazardous Energy Sources (Lockout/Tagout)",* which includes requirements for release of stored energy and OSHA Safety and Health Regulations for Construction 1926.555 Conveyors https://www.osha.gov/

3.2 Conveyor Design and Safety Guidelines

A safety risk evaluation is required for all of our standard equipment. The safety risk evaluation considers every potential hazard on the conveyor, weighs the probability and the severity of the potential injury, and addresses methods of mitigation to make the risk of injury either low or negligible. We use the ANSI B11 TR3 standards for all of our risk evaluation.

In addition, all of our equipment is designed to comply with the following national and industry standards:

ANSI 2535 – Safety Color Code

ANSI Z244.1 – Lockout/Tagout of Energy Sources

ASME B15.1 – Safety standard for Mechanical Power Transmission Apparatus

ASME B20.1 – Safety standard for Conveyors and Related Equipment

CEMA – Safety Standards and Labels

OSHA 1910.147 – The Control of Hazardous Energy

OSHA 1910.212 - General Requirements for all Machines

OSHA 1910.95 – Occupational Noise Exposure

Definitions:

ANSI = American National Standard Institute

ASME = American Society of Mechanical Engineers

CEMA = Conveyor Equipment Manufacturers Association

OSHA = Occupational Safety and Health Administration

3.3 ANSI Standards for Conveyors

It is essential for safe and efficient system operation that safety information and guidelines presented here are properly understood and implemented.

MHS Conveyor recognizes American National Standard Institute (ANSI) booklet entitled ***Safety Standards for Conveyors and Related Equipment B20.1.*** For more information go to: http://webstore.ansi.org/default.aspx

With any piece of industrial equipment, conditions exist that might cause injury to you or your co-workers. Because it is not possible to describe each potentially hazardous situation that might develop, you must be alert at all times for unsafe conditions. To avoid injury, use maximum possible care and common sense and adhere to all safety standards.

Take special care while maintaining and inspecting electrical equipment and devices. All personnel working on or around the system should be aware of, and adhere to, all **CAUTION**, **DANGER**, and **WARNING** signs.

Labels or signs are posted to reduce the risk of injury to all personnel. Never assume that the signs and notices are applicable only to inexperienced personnel. Maintain signs in a legible condition. Contact your supervisor to post additional safety signs if you feel they are necessary. http://www.ansi.org/

ANSI Conveyor Safety Rules

Conveyor safety rules, as well as specific regulations and guidelines listed in this publication:

- DO NOT touch moving Conveyor parts.
- DO NOT walk, ride, or climb on the Conveyor.
- DO NOT operate the Conveyor with chain guards or other protective guards removed.
- Keep jewelry, clothing, hair, etc., away from the Conveyor.
- Know the location and function of all start/stop devices and keep those devices free from obstruction.
- Clear all personnel from the equipment before starting the Conveyor.
- DO NOT attempt to clear product jams while the Conveyor is running.
- Allow only trained and authorized personnel to maintain or repair Conveyor equipment.
- DO NOT load the Conveyor beyond specified design limits.
- DO NOT attempt to make repairs to the Conveyor while it is running.
- DO NOT modify equipment without checking with the manufacturer.
- DO NOT operate or perform maintenance on equipment when taking any type of drug, sedative, when under the influence of alcohol, or when over fatigued.
- Report any unsafe condition to your supervisor or maintenance staff.

3.4 CEMA Standards for Conveyor

The Conveyor Equipment Manufacturers Association (CEMA) provides safety information related to conveyor systems. There are Conveyor Safety Video and Conveyor Safety Poster produced by CEMA.

MHS Conveyor recommends these videos for training and education purposes as part of a safe working environment around conveyor equipment. The videos introduce awareness of operations, personnel, maintenance technicians, and management to safety hazards commonly associated with the automated material handling conveyor equipment.

The safety posters reviews important safety labels and are intended to be posted in public places as a day-to-day reinforcement of good safety practices. These posters can be downloaded from the CEMA Website at http://www.cemanet.org/safety-label-posters or for more information for both the safety poster and the videos can be purchased from CEMA. Visit their website – www.cemanet.org

For additional information or contact them at:

CONVEYOR EQUIPMENT MANUFACTURERS ASSOCIATION
5672 Strand Ct., Suite 2
Naples, Florida 34110
239.514.3441

CEMA Safety Label Meanings

ANSI Z535.4 – Product Safety Signs and Labels

The word or words that designate a degree or level of hazard seriousness. The signal words for product safety signa are: DANGER, WARNING, and CAUTION.

DANGER -Indicates an imminently hazardous situation which, if not avoided, will result in death or serious injury. This signal word is to be limited to the most extreme situations.

WARNING – Indicates potentially hazardous situation which, if not avoided, could result in minor or moderate injury. It may also be used to alert against unsafe practices.

CAUTION – Indicates a potentially hazardous situation which, if not avoided, may result in minor or moderate injury. It may also be used to alert against unsafe practices.

http://www.cemanet.org/cema-safety-label-meanings/

3.4.1 CEMA Unit Handling Standard

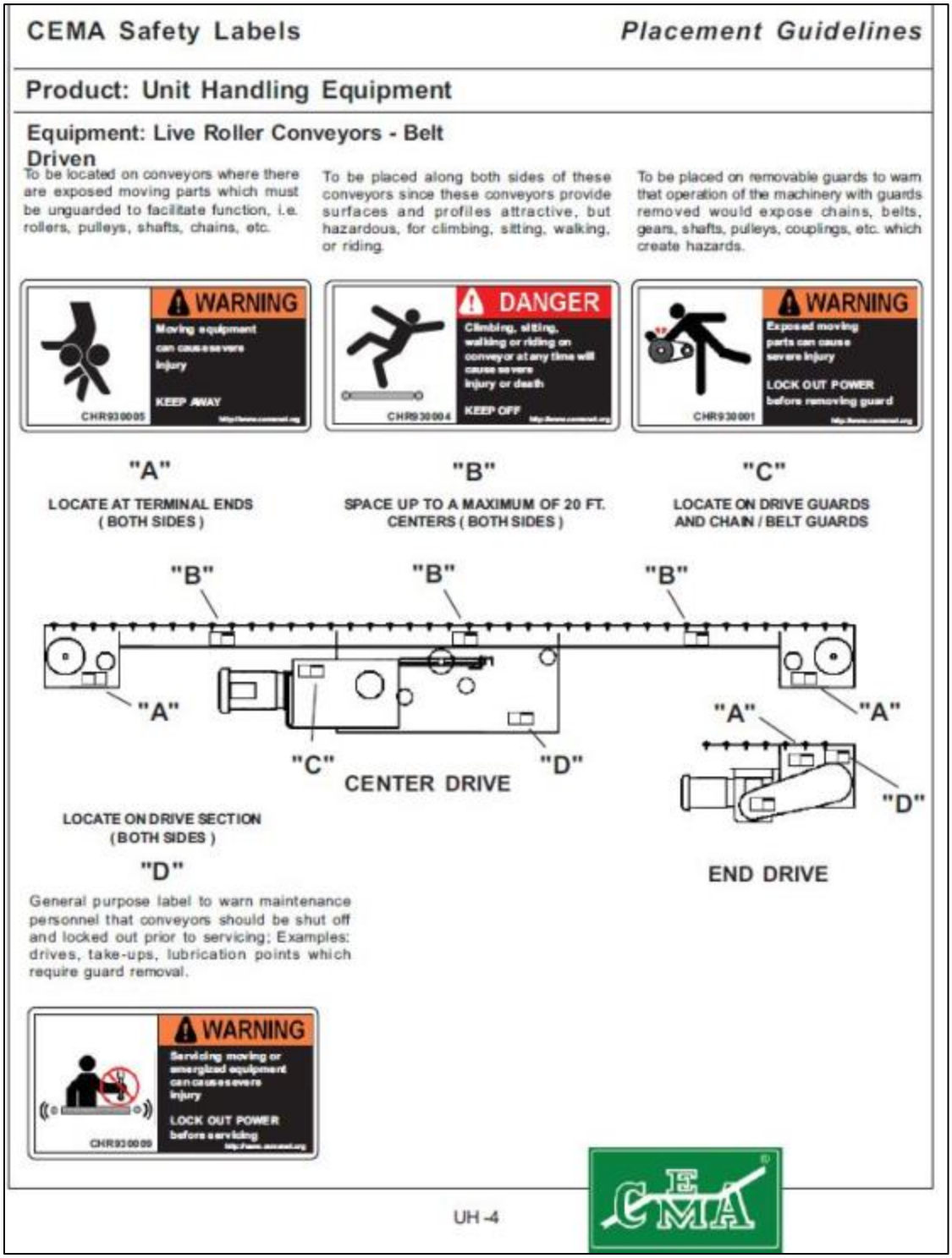

CEMA Safety Labels — ***Placement Guidelines***

Product: Unit Handling Equipment

Equipment: Live Roller Conveyors - Belt Driven

To be located on conveyors where there are exposed moving parts which must be unguarded to facilitate function, i.e. rollers, pulleys, shafts, chains, etc.

To be placed along both sides of these conveyors since these conveyors provide surfaces and profiles attractive, but hazardous, for climbing, sitting, walking, or riding.

To be placed on removable guards to warn that operation of the machinery with guards removed would expose chains, belts, gears, shafts, pulleys, couplings, etc. which create hazards.

"A"
LOCATE AT TERMINAL ENDS (BOTH SIDES)

"B"
SPACE UP TO A MAXIMUM OF 20 FT. CENTERS (BOTH SIDES)

"C"
LOCATE ON DRIVE GUARDS AND CHAIN / BELT GUARDS

LOCATE ON DRIVE SECTION (BOTH SIDES)

"D"

General purpose label to warn maintenance personnel that conveyors should be shut off and locked out prior to servicing; Examples: drives, take-ups, lubrication points which require guard removal.

UH -4

3.4.2 CEMA Poster for Package Conveyor

3.5 Warnings and Safety Instructions

Failure to follow the instructions and cautions throughout this manual and warning label on the conveyor may result in injury to personnel or damage to the equipment.

Your MHS Conveyor is powered by a motor and can be stopped only by turning off electrical power to the motor. As with all powered machinery, the drive-related components – including sprockets, chains, shafts, universal joints, and pneumatic devices – can be dangerous. We have installed or provided guards to prevent accidental contact with these parts, along with warning labels to identify the hazards.

Special attention must be paid to the following areas of this manual:

WARNING	
	• Indicates a potentially hazardous situation, which, if not avoided, could result in death or serious injury.

CAUTION
• Indicates a situation, which, if not avoided, could result in property damage.

Safety: Always lock out power source and follow recommended safety procedures.

3.5.1 Safety Warnings

WARNING

- After maintenance, REPLACE guards immediately.
- Keep ALL warning labels clean and clear of any obstructions.
- Never remove, deface, or paint over WARNING or CAUTION labels. Any damaged label will be replaced by MHS Conveyor at no cost by contacting Lifetime Services.
- It is very important to instruct personnel in proper conveyor use including the location and function of all controls.
- Special emphasis must be given to emergency stop procedures.
- It is important to establish work procedures and access areas, which do not require any part of a person to be under the conveyor.
- It should be required that long hair is covered by caps or hairnets.
- Loose clothing, long hair, and jewelry must be kept away from moving equipment.
- Maintain enough clearance on each side of all conveyor units for safe adjustment and maintenance of all components.
- Provide crossovers or gates at sufficient intervals where needed to eliminate the temptation for personnel to climb over or under any conveyor.
- Walking or riding on a moving conveyor must be prohibited.
- Before performing maintenance on the conveyor, make sure the start-up controls are locked out and cannot be turned on by any person other than the one performing the maintenance.
- If more than, one crewmember is working on the conveyor, **EACH CREW MEMBER MUST HAVE A LOCK ON THE POWER LOCKOUT**.
- All pneumatic devices must be de-energized and air removed to prevent accidental cycling of the device while performing general maintenance.
- Make sure all personnel are clear of all conveyor equipment before restarting the system.
- Before restarting a conveyor which has been stopped because of an emergency, an inspection of the conveyor must be made and the cause of the stoppage determined. The starting device must be locked out before any attempt is made to correct the cause of stoppage.

⚠ WARNING

- Before servicing or performing any work in the motor control panel, disconnect and lock out air and the main incoming service. If only the panel disconnect is off, the incoming side will still be hot.

3.6 MHS Conveyor Controls Safety Guidelines

The following basic conveyor control safety guidelines are recommended by MHS Conveyor even though Business Partner may or may not purchase conveyor controls from MHS Conveyor. The items listed deal with applications of controls equipment. The actual installation of the equipment must always follow the National Electric Code and all other local codes.

Start-up Warning Horn

Ideally, all conveyors should be within sight of the conveyor start pushbutton. This allows the operator to verify that no one is touching the conveyor or would be in danger if the conveyor were to start up.

If it is not possible to see the entire conveyor being started from the start pushbutton location, then some form of audible warning device is required. It could be a horn, buzzer, bell, or anything unique to that conveyor for that location. It should be loud enough to be heard at any point on the conveyor system. It should sound for approximately five seconds after the start pushbutton is pushed, prior to the actual running of conveyor. Any auxiliary equipment such as vertical lifts, turntables, etc., should also be included in the warning circuitry.

Conveyors that stop and restart under automatic control could also require a horn warning prior to restarting. If it is not easy to distinguish the difference between a fully stopped conveyor system and a momentarily stopped conveyor section, then it is advisable to add a warning horn. All conveyor sections that stop and restart automatically should be marked with appropriate signs or labels.

Start Pushbuttons

Start pushbuttons should be the flush type or guarded such that inadvertently leaning against them will not actuate the conveyor. They should be provided with a legend plate clearly defining which conveyors will be started.

Stop Pushbuttons

Stop pushbuttons should be the extended type such that any contact with it is sufficient to stop the conveyor. They would also be provided with a legend plate clearly defining which conveyors will be stopped.

Operator Controls

Additional operator controls should be designed into the system with the same guidelines that go into start and stop pushbuttons, depending upon their function. Devices which are repeated on multiple control stations, such as emergency stops, should be located at the same relative location on each station (such as lower right corner).

Emergency Stops

All locations where an operator must work directly at the conveyor should be protected by an emergency stop. An operator should not have to move from where he is to actuate the emergency stop.

Conveyors in areas of high pedestrian traffic should also be protected by emergency stop devices.

For all other instances, emergency stops should be located throughout a system such that it is possible to shut down the system without having to walk too far. In these instances the emergency stop is used more to protect the equipment from damage than to protect personnel.

Emergency stops can be of the pushbutton or cable operated switch type. The pushbutton type should be a red, mushroom head maintained pushbutton which requires resetting after it is actuated. Cable operated switches should trip by pulling the cable, and require resetting at the switch.

Actuating an emergency stop must drop-out the start circuit, requiring restarting the system using the start pushbuttons provided.

An emergency stop should normally stop all conveyors in the system. Very large systems may involve dividing a system into zones of control based on proximity of personnel, safety hazards, walls obstacles, etc.

Controls Logic

Solid state controls logic devices, such as programmable controllers are used extensively for conveyor control. They are very reliable, but a hardware failure or software bug would cause an output to function erratically. For this reason, start circuits, warning horn circuits, and emergency stops should usually be configured using conventional relay logic.

Safety Switches

All conveyor control cabinets and motors should be provided with safety (or disconnect) switches. These switches must have provisions for padlocking. As required for maintenance, equipment should be locked in the off position.

Special Devices

Special devices and equipment such as vertical lifts, turntables, high speed conveyors, etc., all have unique design and safety requirements. These should be looked at in each case to determine what the requirements might be.

Rev 08/22/2011

Chapter 4: CRUZbelt Introduction

4.1 CRUZbelt Features

This manual provides information for installing, operating, and maintaining your MHS Conveyor CRUZ®belt conveyor. A complete parts list has been provided, along with a list of recommended spare parts. Important safety information is included throughout this manual.

MHS Conveyor CRUZ®belt is considerably different than other belt conveyor. An understanding of this manual will help you take advantage of the many unique features of CRUZ®belt.

Features and Benefits:

- CRUZ®channel side frames have integrated cable trays.
- Side frames allow optional shrouds for a sleek appearance.
- Slider bed frames are interchangeable with roller bed frames.
- All intermediate bed sections can be made into end beds.
- End pulleys, snubbers, and take-up pulleys are adjusted with cams. By eliminating the usual threaded rods, adjustments are made in seconds.
- Innovative tube spanners eliminate bed racking.
- Alignment sight holes allow all pulleys to be easily squared before startup.
- Motor mounting allows chain adjustment without affecting sprocket alignment.
- This manual is arranged in the suggested order of installation.

CRUZbelt 4 Center Drive Complete Unit

CRUZbelt 4 and Strip Belt Spur

4.2 Definition of Terms

CRUZ®belt ABBREVIATIONS LISTING	
ADJ	ADJUSTABLE
ASY	ASSEMBLY
BRG	BEARING
BR*	BELT ON ROLLER
BF	BETWEEN FRAME
BRKT	BRACKET
BRK	BRAKE
WBB	Welded BUTT-BOLT CONNECTION
C	CENTER (2.25”C, 3”C, 4”C, 6”C)
CDR	CENTER DRIVE
CONN	CONNECTOR (Mechanical, Electrical, Pneumatic)
XM	CROSSMEMBER
CZB	CRUZ BELT
DR	DRIVE, DRIVE BED
DL	DUAL LANE
EL	ELEVATION
EDR	END DRIVE
EURO	EURODRIVE
FPM	FEET PER MINUTE
FT	FOOT/FEET
FLA	FULL LOAD AMPS
GALV	GALVANIZED
GR	GUARD RAIL
HD*	HEAVY DUTY
HP	HORSE POWER
HZ	HORIZONTAL TAKE-UP
IN	INCH
INDBLT	INDUCTION BELT
INT	INTERMEDIATE BED
ID	INSIDE DIAMETER
LCD	LACED
LGTH	LENGTH
L/	LESS
LM	LOGIC MODULE
LOW PRO	LOW PROFILE
LP	LOW PROFILE
MAX	MAXIMUM
MM	METRIC
MID	MIDDLE
MIN	MINIMUM
MOD	MODULE
MTR	MOTOR

CRUZ®belt ABBREVIATIONS LISTING	
MNT	MOUNT
MTG	MOUNTING
NPT	NATIONAL PIPE THREAD
NOML	NOMINAL
NO	NOSE OVER
NU	NOSE UNDER
OAL	OVER ALL LENGTH
OAW	OVER ALL WIDTH
PL	PLATE
PLTD	PLATING (Roller Description, previously FLCT)
LBS	POUNDS
PWR	POWER
PRBG	PRECISION BEARING
PRS	PRESSURE
RPM	REVOLUTIONS PER MINUTE
RC	ROLLER CHAIN
SKWLOC	SKWEEZELOCK
SB	SLIDER BED
STD	STANDARD
THD*	THREAD
TB	TIMING BELT
U- ARMS	ADJUSTABLE CHANNEL GUARD RAIL MOUNTS
URO	URETHANE
V	VOLT
WLDMT	WELDMENT

4.3 Product Description Examples

CRUZBelt CZB End/Intermediate Bed

TYPE	MODEL	WIDTH	BED TYPE	FRAME	ROLLER CENTERS	LENGTH
BED	CZB	34BF	E	CZ	BR6	10'0"

EXAMPLE: BED,CZB-34BF-E-CZ-BR6-10'0"

PRODUCT DESCRIPTION: Bed, CRUZBelt Conveyor, 34" Width Between Frame, End Bed (vs. I - Intermediate), CRUZ Frame (CRUZ Channel), Belt-on-Roller 6" Roller Centers, 10'0" Overall Length

CRUZBelt CZB Drive Bed

TYPE	MODEL	WIDTH	DRIVE TYPE	FRAME	ROLLER CENTERS	FLOW DIRECTION	LENGTH
BED	CZB	34BF	CDR	CZ	S	RH	12'0"

EXAMPLE: BED,CZB-34BF-CDR-CZ-S-RH 12'0"

PRODUCT DESCRIPTION: Bed, CRUZBelt Conveyor, 34" Width Between Frame, Center Drive, CRUZ Frame (CRUZ Channel), Belt-on-Slider, Right Hand Flow 12'0" Overall Length

CRUZBelt CZB Drive Train

TYPE	MODEL	DRUM SIZE	DRIVE TYPE	MOTOR POWER	VELOCITY	DRIVE MODEL	FLOW DIRECTION	VOLTAGE	DRIVE TRAIN
DR-TRAIN	CZB	8"	CDR	1.50HP	150FPM	L/BRK	LH	DUAL V	CHN

EXAMPLE: DR-TRAIN,CZB-8"-CDR-1.50HP 150FPM-L/BRK-LH-DUAL V-CHN

PRODUCT DESCRIPTION: Drive Train, CRUZBelt Conveyor, 8" Diameter Drive Drum , Center Drive, 1.50 Horsepower 150 Feet Per Minute Velocity, Less (Without) Brake, Left Hand Flow, Dual Voltage - 208/230/460 V (vs. 460V), Chain and Sprocket Drive (vs. TB - Timing Belt)

CRUZBelt CZB Noseunder/Noseover

TYPE	MODEL	WIDTH	BED TYPE	FRAME	ROLLER CENTERS	INCLINE/DECLINE ANGLE
NU	CZB	34BF	INT	CZ	BR	12DEG

EXAMPLE: NU,CZB-34BF-INT-CZ-BR-12DEG

PRODUCT DESCRIPTION: Noseunder, CRUZBelt Conveyor, 34" Width Between Frame, Intermediate Bed (vs. End), CRUZ Frame (CRUZ Channel), Belt-on-Roller, 12 Degree Incline/Decline Angle

CRUZBelt CZB Auxiliary Belt Take-Up

TYPE	MODEL	WIDTH	BED TYPE	FRAME	ROLLER CENTERS	LENGTH
BED	CZB	34BF	AUX	CZ	S	5'0"

EXAMPLE: BED,CZB-34BF-AUX-CZ-S-5'0"

PRODUCT DESCRIPTION: Bed, CRUZBelt Conveyor, 34" Width Between Frame, Auxiliary Take-Up, CRUZ Frame (CRUZ Channel), Belt-on-Slider, 5'0" Overall Length

CRUZBelt CZB Empty Carton Conveyor (Trash) Noseover

TYPE	MODEL	WIDTH	BED TYPE	FRAME	ROLLER CENTERS	INCLINE/DECLINE ANGLE
NO	CZB	34BF	ECC	CZ	S	7DEG

EXAMPLE: NO,CZB-34BF-ECC-CZ-S-7DEG

PRODUCT DESCRIPTION: Noseover, CRUZBelt Conveyor, 34" Width Between Frame, Empty Carton Conveyor, CRUZ Frame (CRUZ Channel), Belt-on-Slider, 7 Degree Incline/Decline Angle

For the most current list of **"Product Description"** and **"Terms and Abbreviations"** Log into mhs-conveyor.com and select Support/Engineering Support Documents.

Chapter 5: CRUZbelt Receiving & Site Preparation

General

MHS Conveyor CRUZbelt units are shipped in subassemblies. These subassemblies are packaged to guard against damage in shipment, when handled properly.

Examination immediately following unloading will show if any damage was caused during shipment. If damage is evident, claims for recovery of expenses to repair damage or replace components must be made against the carrier immediately. While unloading, a check must be made against the Bill of Lading, or other packing lists provided, to confirm full receipt of listed items.

CAUTION
• TAKE CAUTION DURING THE REMOVAL OF EQUIPMENT FROM THE CARRIER. Remove small items and boxes first. Pull and lift only on the skid, not on the frame, cross member or any part of the conveyor equipment.

Preparation of Site

After the conveyor is received, move it to the installation, or designated dry storage, area as soon as possible. Clean up all packing material immediately before parts get lost in it. Loose parts should remain in the shipping boxes until needed.

Prior to starting the assembly of the conveyor, carefully check the installation path to be sure there are no obstructions that will cause interference. Check for access along the path needed to bring in bed sections and components closest to the point where they are needed. It is often necessary to give the area, along the system path, a general cleanup to improve installation efficiency, access, and accuracy.

5.1 Part Inventory & Identification

Label Identification

Each subassembly is shipped completely assembled except typical loose parts, which are in boxes with the subassemblies. Separate the conveyor subassemblies by types for inventory and ease of locating during installation.

An identification label is attached to the charged end of the center bed of each CRUZbelt Module unit.

Labels **may** contain the following information:

Item number
Description
Job Number
Mfg. Number
Tag number (if specified)
Assembler's clock number
Date of manufacture
QR (Quick Response) bar code
Scan bar code for IOM manual

Scan the QR code to retrieve the IOM Manual, if nothing happens; check your scanner settings to make sure the QR Label setting is enabled.

On the supports, the tag is located on the bottom side of the foot.

On special devices, it is located on a convenient flat surface that is not offensive to the appearance of the equipment but is still accessible for viewing. These numbers can be cross-referenced against the packing list.

Loose parts are boxed and shipped separately.

You should have all conveyor sections and supports for a particular conveyor prior to installation. It is cost-effective to identify and procure any missing parts before they are needed for assembly.

Small items like nuts and bolts are weigh-counted and packaged by size and type.

Chapter 6: CRUZbelt Application & Installation Details

6.1 General Procedures

The following procedures are to be used as guidelines only. Specific installation methods will vary somewhat depending on available equipment on site and each installer's preferences based on experience.

Dimensional Reference Points

The path of each conveyor in the system is determined by establishing a reference point at each end. The centerline of the conveyor is established and a chalk line is snapped between these points.

Conveyors should be installed with the centerline of the bed matching the centerline of the conveyor path within 1/8" of true center. Locate and mark the center of the crossmembers at each end of the conveyor. Use a plumb line or other applicable device to ensure accuracy to the chalk line.

Always carry out a thorough check for any obstructions such as building columns, manholes, etc. It may be necessary to reroute the conveyor to avoid the obstruction. In this case it would be advisable to begin installation at this point, using the obstruction as a reference point (Datum), and install the sections in either direction as required.

All conveyor sections must be checked for squareness prior to installation as "racking" or being knocked out of square may have occurred during shipping and handling.

WARNING

- The Installation Supervisor must be experienced with conveyor and qualified in the mechanics of the equipment and enforce safe working procedures for the protection of the crew, customer, and customer's property.

WARNING

- Before restarting a conveyor which has been stopped because of an emergency, an inspection of the conveyor must be made and the cause of the stoppage determined. The starting device must be locked out before any attempt is made to correct the cause of stoppage.

6.2 Electrical / Gearmotor

WARNING

- All electrical controls must be installed, wired, and connected by a licensed electrician.

All motor controls and wiring must conform to the National Electrical Code as published by the National Fire Protection Association and approved by the American National Standards Institute, Inc. In addition, since specific electrical codes vary from one area to another, be sure to check with the proper authorities before starting the electrical wiring.

WARNING

- All Standard Gearmotor with brake Coil Rectifiers are Half-Wave and are suitable only for 480VAC.
- Using standard Gearmotor with Brake at 240VAC will void the Gearmotor with brake warranty.
- Contact Distributor Services for the correct rectifier for your intended voltage if other than 400-480VAC.

The voltage of the motor will be stamped on the name plate. This voltage must match available voltage. Consult the wiring diagram on the motor for proper connections. If a single direction conveyor with a 3 phase motor runs the wrong direction, two leads must be switched to reverse rotation.

WARNING	
	• VFD s (variable frequency drive) motor controllers may not be directly connected to any Gearmotor with brake. Brake Coil Rectifier as they are not compatible and the motor/brake will not completely release. • VFD connection to Brake Coil Rectifier will void Gearmotor with brake warranty.

Consult the wiring diagram of the inside cover of the starter and pushbutton for the proper electrical connections. Three phase drives require transformers to reduce the pushbutton and control circuit to 115 volts. If primary voltage is changed, the transformer must be changed, according to the wiring diagram found on the transformer.

NEMA enclosure ratings are as follows:

NEMA 1- Indoor use, provides protection against contact with internal components. Suitable for use in warehouse and distribution environments.

Gasket NEMA 1- Same use as NEMA 1, but with additional protection against dirt and dust.

NEMA 3- Outdoor use, designed to keep out rain and dust.

NEMA 4- Indoor and outdoor use, designed to keep out rain and dust.

NEMA 12- Indoor use, provides protection against dust, dirt, oil seepage, and dripping of non-corrosive liquids. Suitable for use in industrial environments.

NEMA 13- Indoor use, provides protection against dust, dirt, sprayed oil and non-corrosive liquids.

NOTE: All the controls logic, safety switches, and some special devices are covered by the original manufacturer's warranty.

Conveyor in areas of high pedestrian traffic should also be protected by emergency stop devices.

Emergency stops should be located throughout a system. Their location will depend on likely observation points and areas with special devices or interfaces between equipment.

Emergency stops can be a pushbutton or cable operated switch. The pushbutton should be mushroom-style and red. The pushbutton must require resetting after actuation. Cable operated switches should trip by pulling the cable and require resetting at the switch.

An emergency stop should normally stop all conveyors in the system. Very large systems may involve dividing the system into zones of control.

Actuating an emergency stop must drop out the start circuit and require restarting the system using the start pushbutton.

WARNING	
	• Before restarting a conveyor, which has been stopped because of an emergency, an inspection of the conveyor shall be made and the cause of the stoppage determined. The starting device shall be locked out before any attempt is made to correct the cause of the stoppage.

Controls Logic

Solid state controls logic devices, such as programmable controllers, are used extensively for conveyor control. They are very reliable, but a hardware failure or software bug could cause an output to malfunction. For this reason, start circuits, warning horn circuits, and emergency stops should usually be configured using conventional relay logic.

Safety Switches

All conveyor control cabinets and motors should be provided with safety (or disconnect) switches. These switches must have provisions for padlocking. As required for maintenance, equipment should be locked in the OFF position.

Special Devices

Special devices and equipment such as vertical lifts, turntables, high speed conveyors etc. all have unique design and safety requirements and should be evaluated individually.

6.3 Gear Motor Activation

PRIOR to systems activiation - Please inspect the gear unit for a vent and if applicable to the product remove the rubber sealing plug to activate. The vent is designed to allow excessive pressure to escape. Each gear unit should have a yellow instruction tag as shown below. The tag can be removed after the plug is removed.

Note: The rubber sealing plug is in place for shipping and storage purpose only.

⚠ WARNING	
	• In order for the gear motor to release pressure, the vent must be activated by removing the rubber sealing plug PRIOR to gear unit start up.

Please check you gear unit for a vent and if applicable to your product, remove the sealing plug to activate. "https://www5.nord.com" Operation Manual for Gear Units (B1000).

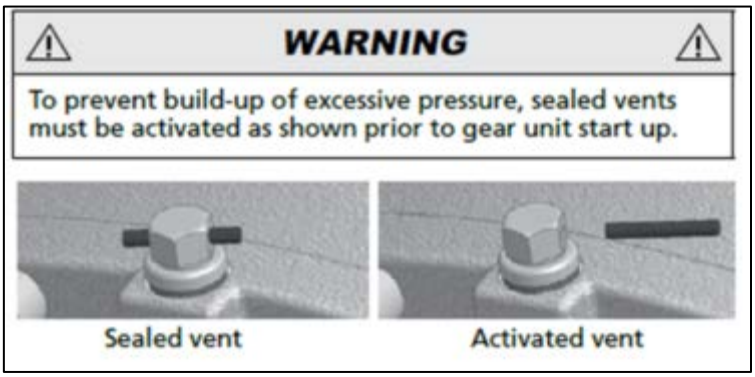

Note: Yellow tags may be tucked out of sight. Please inspect all motors for a vent and remove sealing plug, if present, to activate.

The following pictures are examples showing where vent plugs may be located depending on the product line and motor position.

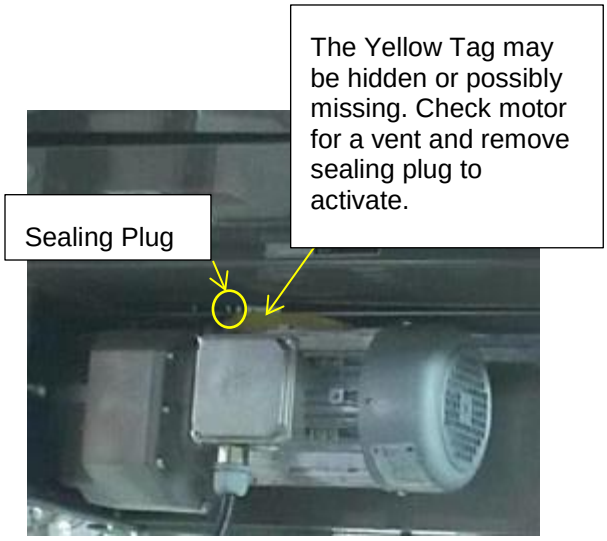

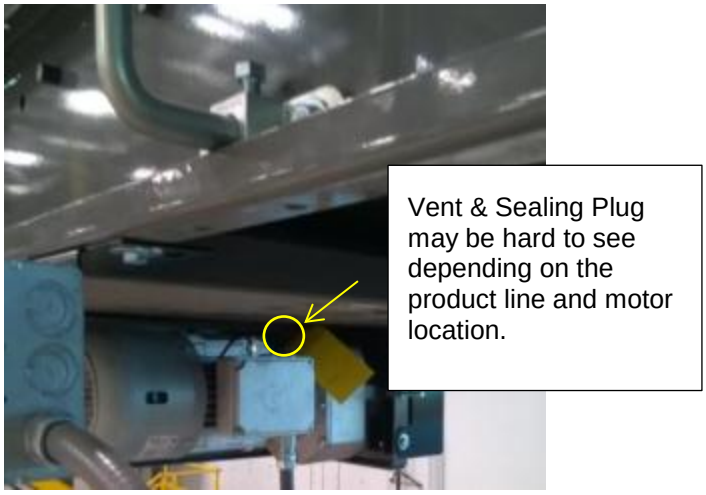

6.4 Squaring Conveyor

All conveyor sections must be checked for squareness prior to installation as “racked” or being knocked out of square may have occurred during shipping and handling. An out of square conveyor section is a leading cause of belt mistracking.

Measure diagonally across the four corners of the conveyor frame to determine if the frame is out of square. If the measurement is not equal between the two diagonals, the frame is not square. A “racked” conveyor will skew the rollers, causing the belt to wander off center.

The conveyor sections are joined together with welded butt plate connectors. If a conveyor section is determined to be out of square, adjustment must be made before proceeding to the next section. Correct the squareness of the conveyor frame by installing a tie rod along the longest diagonal dimension and adjusting the turnbuckle until the diagonal measurements are equal in length. It is important to loosen the support and connection hardware before attempting any adjustment.

If gaps appear between bed joints as a result of squaring the conveyor, take care not to “re-rack” the conveyor by pulling the sections together at the bed joints. Insert optional shim plates or washers to the required thickness to fill the gap before tightening the connection hardware. Verify the squareness of the conveyor after installation.

CAUTION

- An out of square conveyor section is a leading cause of belt mistracking.

LOOSEN SUPPORT AND CONNECTION HARDWARE BEFORE ATTEMPTING ANY ADJUSTMENT.

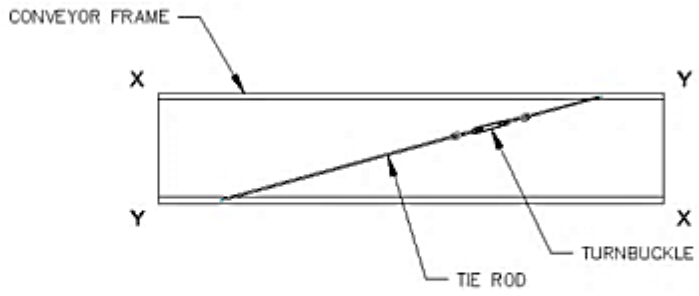

MEASURE DIAGONALLY ACROSS THE FOUR CORNERS.
IF Y–Y DIMENSION IS GREATER THAN X–X, ASSEMBLY TIE ROD AS SHOWN.
IF X–X DIMENSION IS GREATER THAN Y–Y, ASSEMBLY TIE ROD ACROSS THE OPPOSITE DIAGONALS.
ADJUST TURNBUCKLE UNTIL DIAGONAL MEASUREMENTS ARE EQUAL IN LENGTH (±1/16”).

IOM–NBC031

Squaring conveyor Kit# 1134766

6.5 Elevations

All conveyor sections should be installed in accordance with the elevations shown on the drawings. In addition, they must be level across the frame width and length (if horizontal). Leveling of the frames is best done using a rotating laser level or builder's level.

After the first elevation is established at a critical point, the elevation of all other points shall be relative to this first point. Normal practice is to dimension the layout and measure elevations from the floor at each point of support.

As the conveyor system proceeds onto another floor or into another building or room, a new elevation will be measured from the floor at that point. The new elevation will then become the reference from subsequent elevations.

When installing an overhead system, the first elevation is measured from the floor and becomes the reference elevation point until a change in the elevation is shown on the layout. Any new elevation is also measured from the floor and becomes the new reference point. The process is repeated each time an elevation change occurs.

CAUTION
• Consult the building architect or a structural engineer regarding ceiling loading or structural limitations of the building if any conveyor section is ceiling hung.

Component Orientation

Using your conveyor system layout drawing and the numbers on the I.D. tags of each component, position, and orient the conveyor section.

You must know:

The direction of product flow

The elevation height

How the drive is positioned

Charge and discharge end beds

IMPORTANT! Do not make alterations to the equipment without consulting with user's representative and MHS Conveyor. Unauthorized modifications to the equipment may impair its functions, create a hazardous condition, affect its useful life, and /or void the warranty.

6.6 Support Arrangements

Floor Support Information

All supports are intended to be used at a conveyor seam or joint at the end of a unit. All CRUZbelt beds now have butt-bolt connections to allow supporting off center of a bed joint if necessary. Support CRUZbelt at each end and at every splice as shown below. Set all supports for unit to proper height.

Attach supports to both sides of drive.

On intermediate and end beds, attach one support on the end furthest from the drive.

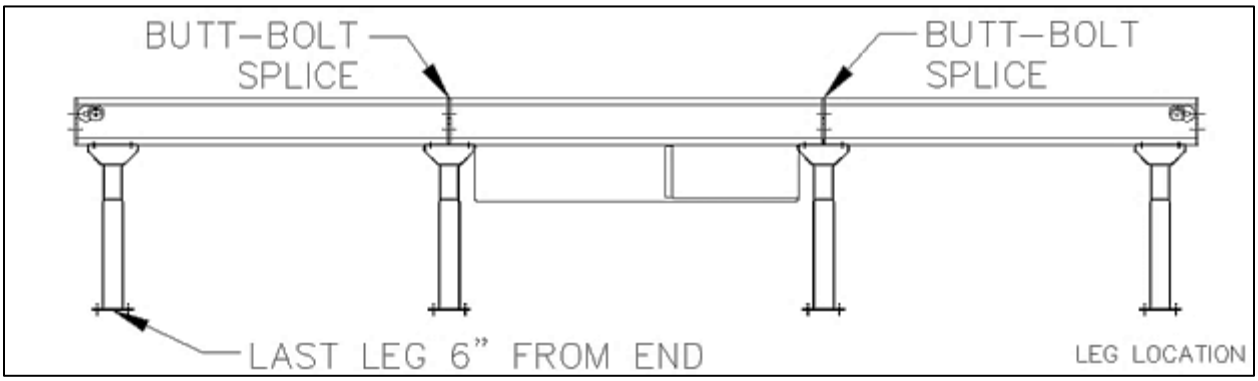

Leg elevations are shown on the elevation drawings. Leg elevation can also be set by subtracting 6-3/8" from the desired top of belt elevation.

NOTE:

Top of Belt – 6 3/8" = Top of Support

If knee braces are required, they are installed on approximately 30' centers as shown below.

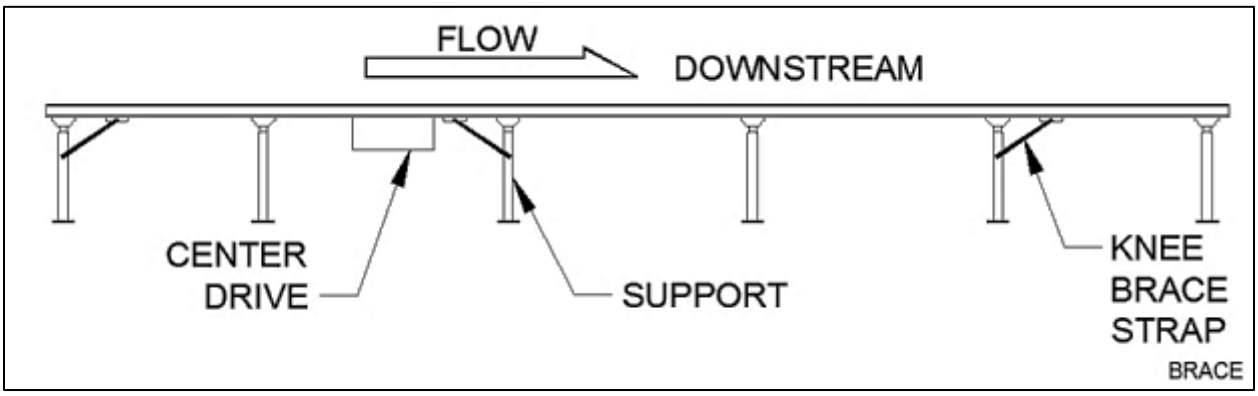

Note brace direction. Near a drive, the brace should be on the upstream side of the support. Elsewhere the brace should be downstream of the support. For maximum effect, the angle between the brace and the side frame must be between 30 and 45 degrees.

WARNING

- Leg uprights must be vertical. Adjust stand head to compensate for slope.

Supports over 48” high use a double knee brace (Type “C”). To make a double knee brace, bolt two straps together with a minimum 8” overlap.

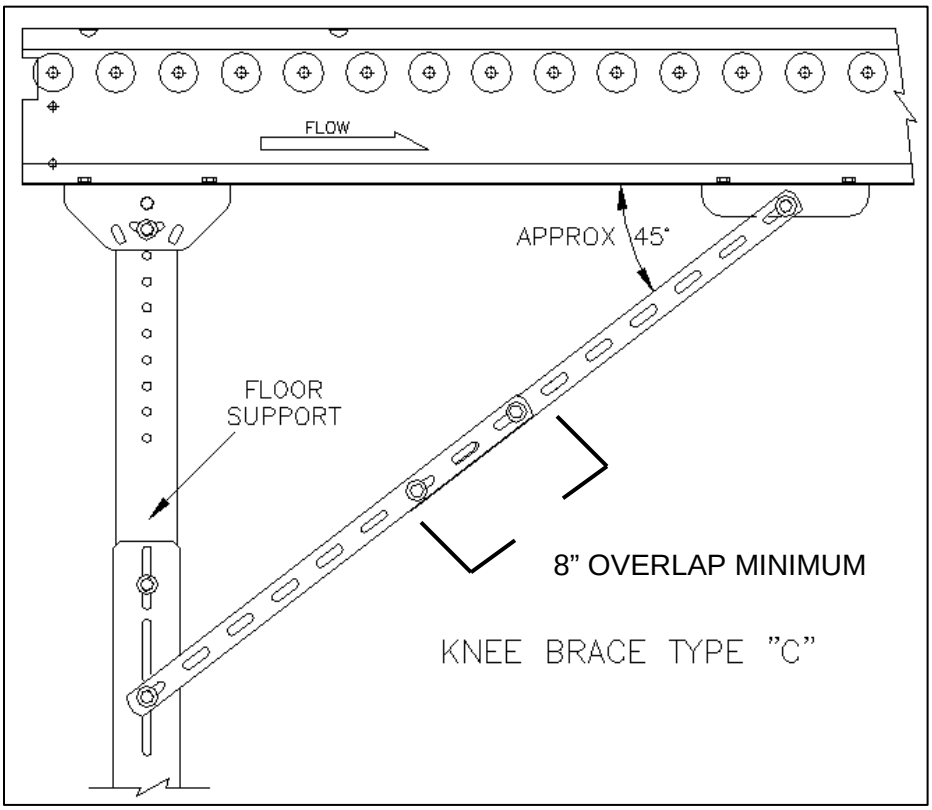

6.7 Ceiling Hanger Installation

WARNING	
	• Consult the building architect or structural engineer regarding ceiling loading and structural limitations of the building.

WARNING	
	• Consult your distributor or a structural engineer to determine hanger and header steel sizes.

Install ceiling hangers as close to conveyor splices as possible, no further than 6’ from a joint and no further than 12’ apart.

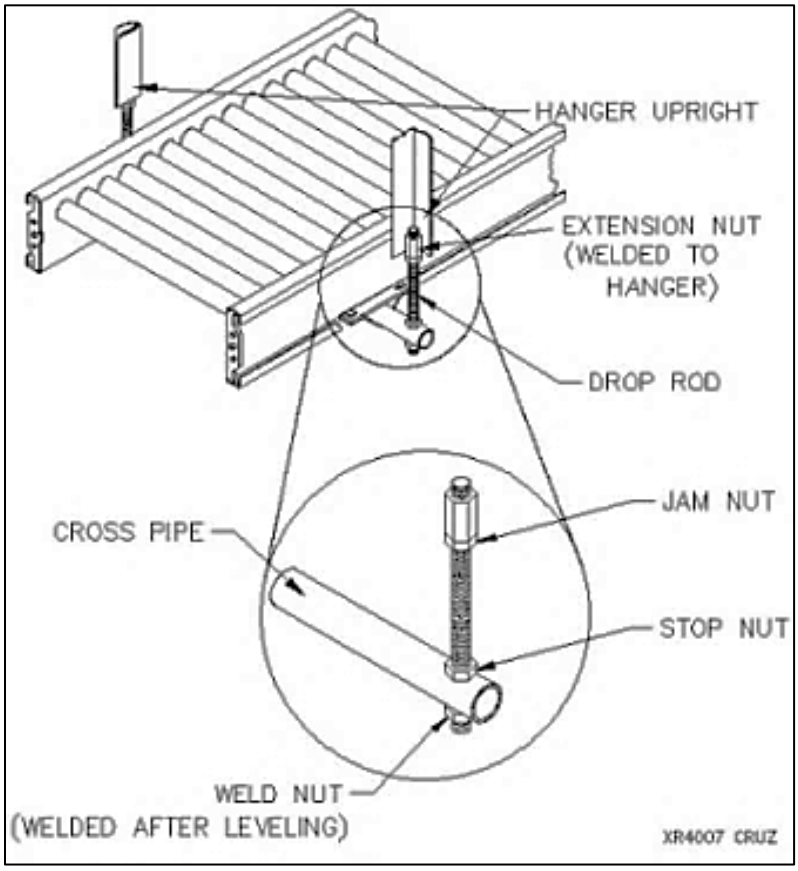

Cross pipes, v-brackets, and related hardware are provided standard. Drop rods and hardware are optional.

Ceiling Hanger Sway Bracing

Sway bracing should be a minimum of 1-1/2” x 1-1/2” x 3/16” angle.

Secure sway bracing to the hanger upright near the conveyor and extend upward at an angle between 30 and 45 degrees.

Brace horizontally to building structure where possible.

Hanger uprights over 12’-0” long must have a horizontal bridge as shown.

Sway bracing should be installed on every third hanger or 30’-0”, whichever is less.

Install X-bracing as shown if bracing cannot be installed outside uprights.

Additional bracing should be used before and after curves, at drives, and at product divert points.

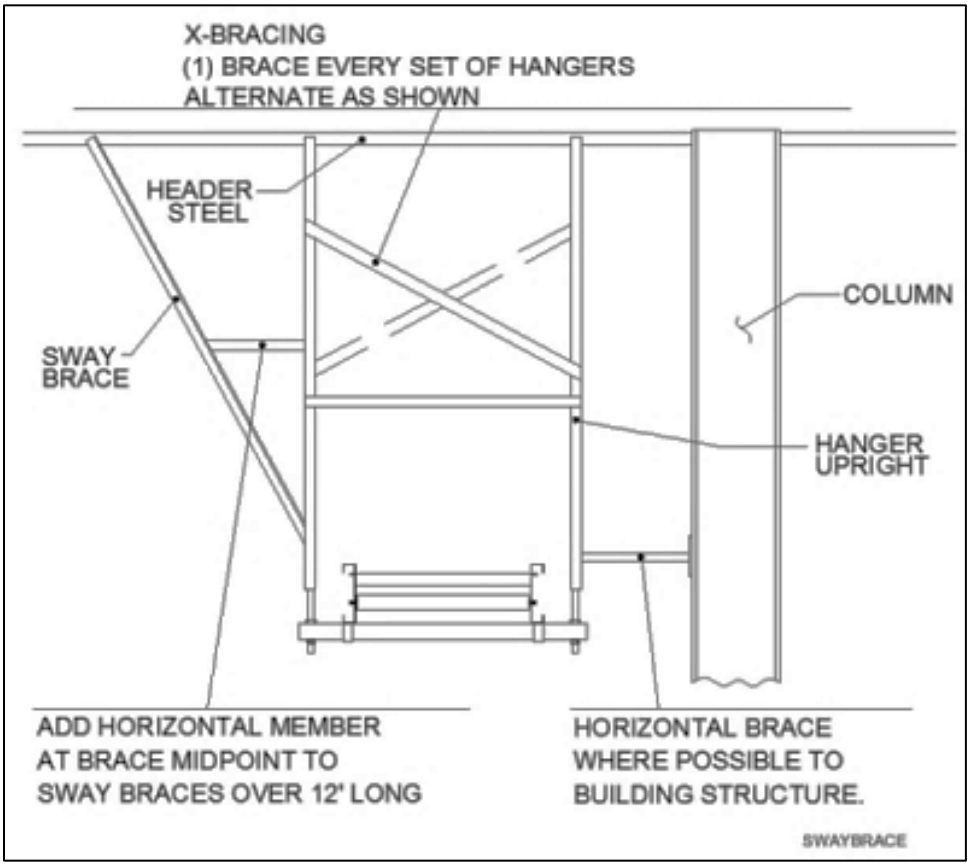

CAUTION
• Check for product clearance before adding X-bracing.

6.8 Anchoring Ceiling Hangers

Open building steel:

The following references are from the American Institute for Steel Construction manual (AISC).

Welding of auxiliary steel (stringers or headers) to building steel is prohibited.

Drilling and bolting to building steel is not recommended and will be done only with the customer's written permission and certified engineer.

Clamping of stringers or headers to building trusses will normally be done only at panel points. Specific customer permission and load calculations by a qualified engineer are necessary to clamp between panel points.

Headers when used for short spans, such as between roof purlins, will be securely clamped to building steel. Stringers when used between headers may be welded or bolted to the headers directly or with suitable angle clips upon approval from certified engineer.

Concrete ceilings:

Anchor by drilling into concrete ceiling and inserting suitable bolt anchors.

Follow bolt manufacturer's recommendations for hole diameter and depth.

Anchor each hanger with four bolts (two per upright) minimum ½" diameter.

Heavier loads like drives or areas of vibration require 5/8" diameter through bolts with backup plates or multiple anchor bolts.

Wood joists/beams:

Hangers may be attached directly to the joists providing the load rating of the building will permit. Attach each hanger to the vertical side of the joist in two places, one above the other. Drill through the joist in the upper position and secure with a ½" diameter through bolt with backup plate or heavy washer. A ½" diameter lag bolt may be used in the lower position.

When a header is required to support the load, it must bridge across two or more joists. Attach as described above. Hanger uprights may then be secured to the header.

Concrete or masonry walls:

Support equipment by drilling into the wall and inserting suitable bolt anchors.

Use a ½" diameter through bolt with backing plate should the load or wall conditions warrant.

WARNING	
	• Consult a structural engineer to determine which anchoring method will support your load. • All attachments to building must be approved by owner as well as certified engineer.

6.9 Empty Carton Conveyors 6” Guard Rail Kit

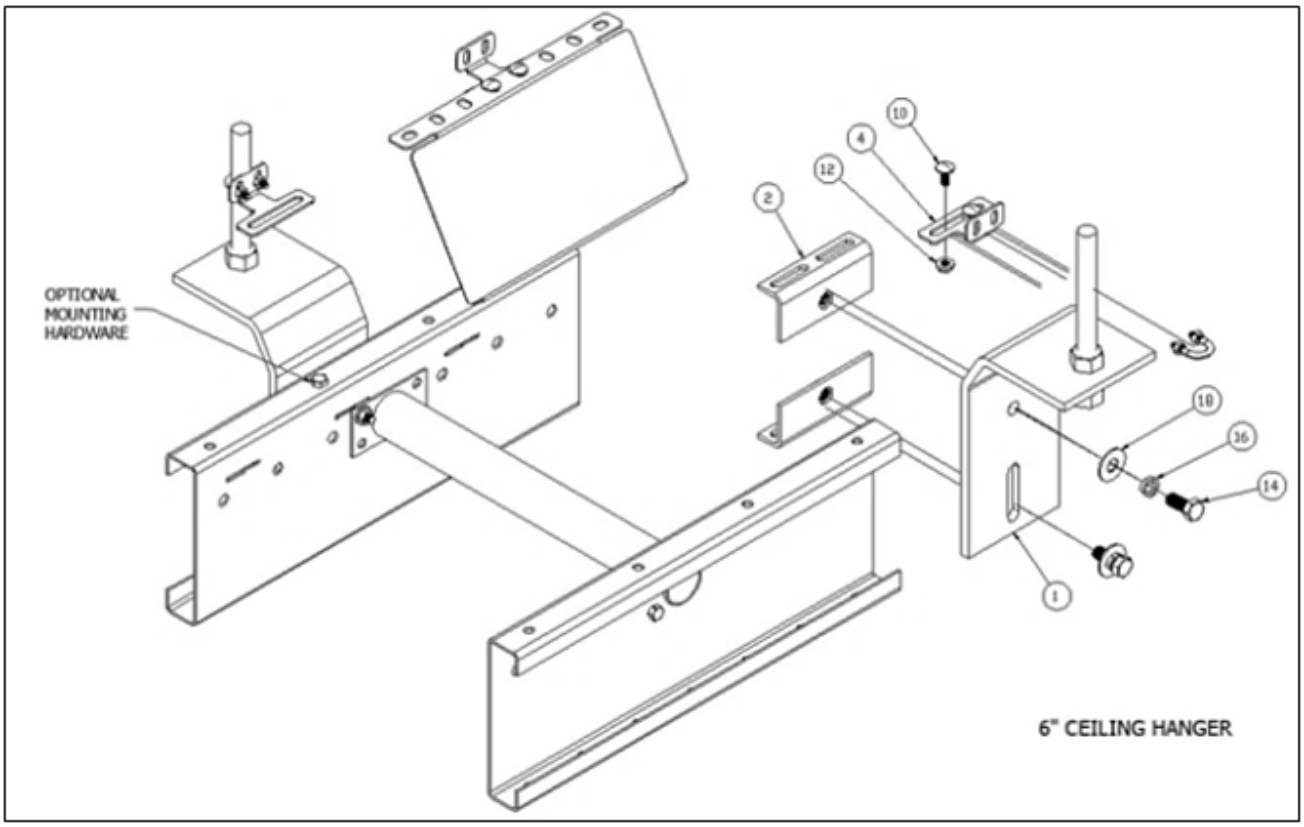

Dwg #	21A597B	KIT, HANGER CEILING CZB TRASH 6" FLARED LOW PROFILE PIPELESS	1158968
Balloon	**Qty**	**Description**	**Part #**
	1	MANUAL, PAGE DWG 21A597	1158970
1	2	BRKT, PIPELESS HANGER 3/8" X 5" X 10"	1158203
2	4	WLDMT, ANGLE CLIP 7GA FOR PIPELESS CEILING HANGER	1158204
4	2	BRKT, 18" FLARED GR SUPPORT	1147772
5	2	U-BOLT, 1/4-20 X 3/4" X 1-1/4" LONG WITH TWO NUTS	E0002981
10	2	SCREW, 5/16-18 X 3/4" BUTT HD BUTT SOC C/S W/FLANGE	95000065
12	2	NUT, 5/16-18 SERRATED FLANGE HEX	95200060
14	4	SCREW, 1/2-13 X 1-3/4" HH PLATED	95000103
16	4	WASHER, 1/2 FLAT USS 1-3/8" OD .086-.132" THK	95300011
18	8	WASHER, 1/2 LOCK ZP	95300012
			Ref Dwg 6" CEILING HANGER

6.10 Empty Carton Conveyors 18” Guard Rail Kit

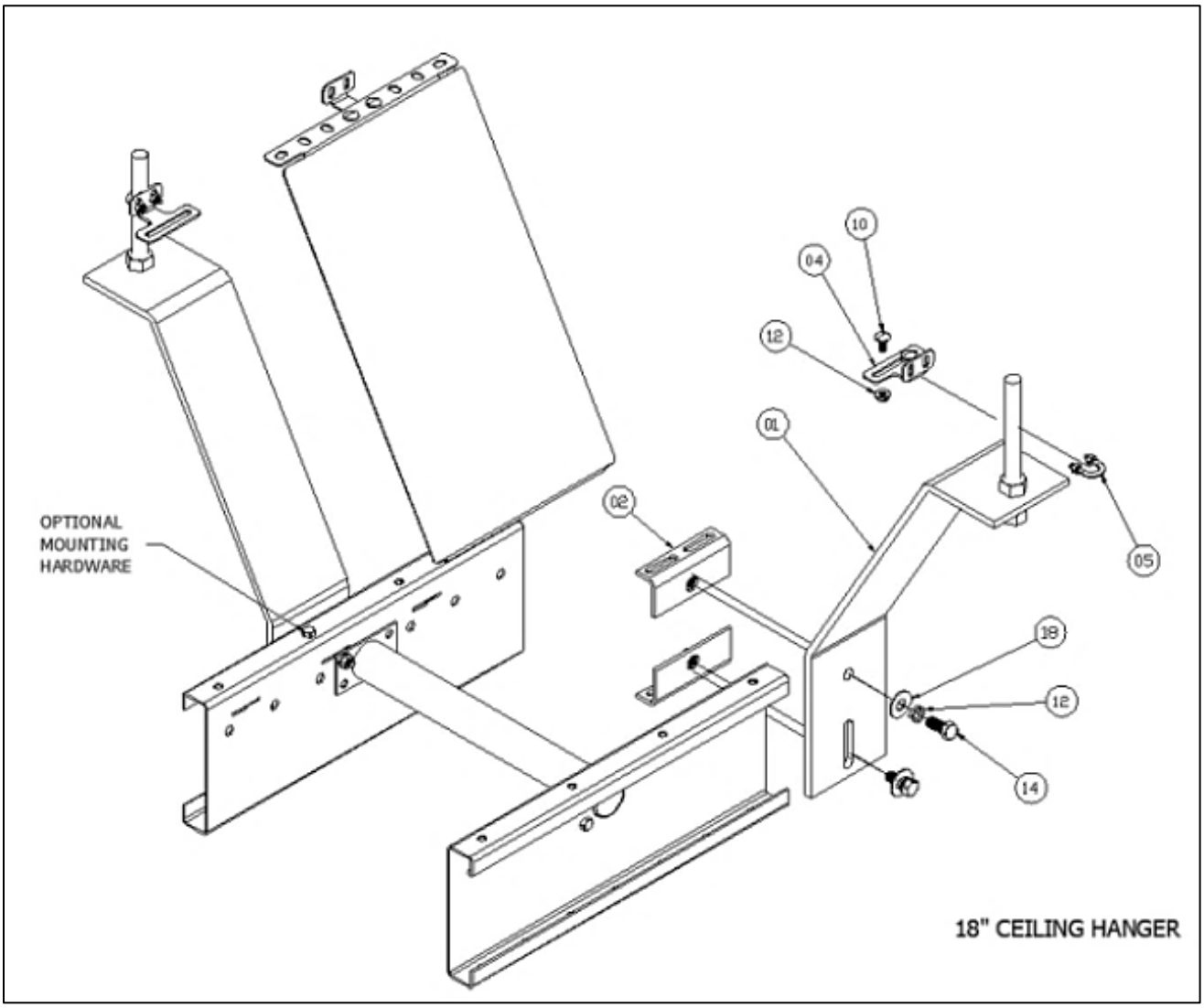

Dwg #	21A596B	KIT, HANGER CEILING CZB TRASH 18" FLARED LOW PROFILE PIPELESS	1158967
Balloon	**Qty**	**Description**	**Part #**
	1	MANUAL, PAGE DWG 21A596	1158969
1	2	BRKT, PIPELESS HANGER 3/8" X 5" X 22"	1158202
2	4	WLDMT, ANGLE CLIP 7GA FOR PIPELESS CEILING HANGER	1158204
4	2	BRKT, 18" FLARED GR SUPPORT	1147772
5	2	U-BOLT, 1/4-20 X 3/4" X 1-1/4" LONG WITH TWO NUTS	E0002981
10	2	SCREW, 5/16-18 X 3/4" BUTTON HEAD SOCKET C/S W/FLANGE	95000065
12	2	NUT, 5/16-18 SERRATED FLANGE HEX	95200060
14	4	SCREW, 1/2-13 X 1-3/4" HH PLATED	95000103
16	4	WASHER, 1/2 FLAT USS 1-3/8" OD X .086-.132" THK	95300011
18	8	WASHER, 1/2 LOCK ZP	95300012

Ref Dwg 18" CEILING HANGER

6.11 Belt Material

BELT MATERIAL (General)	BELT WIDTH	BELT LENGTH	TEMPERATURE RANGE	STRENGTH	ACCEPTABLE STRETCH	LACING	LACING PIN
BELT,CZB _ _-9/16" X _ _ _'- _ _" EWX (21I008) SPARKS **MONO FLEX BU 200** E POLYURETHANE IMPREGNATION (ANTI-STATIC QUIET WEAVE)	**BF - 7/16" +- 1/16" (72" MAX WIDTH)**	**OAL +- 1/4"**	**23 F TO 175 F**	**110 lbs / inch width**	**0.4 - 2.5% (MHS Conveyor RECOMMENDED STRETCH 0.5%)**	**CLIPPER UCM36SS12 (316 STAINLESS STEEL) (PN 1100706)**	**CLIPPER DSS065 (316 STAINLESS STEEL) (PN E0034789)**
BELT,CZB _ _-9/16" X _ _ _'- _ _" HOZ (21I006) SPARKS **MONO FLEX BP 210 QW** 2-PLY SMOOTH BLACK PVC (ANTI-STATIC QUIET WEAVE)							
BELT,CZB _ _-9/16" X _ _ _'- _ _" INC (21I007) SPARKS **MONO FLEX BP 290** QW 2-PLY RIBBED BLACK PVC (ANTI-STATIC QUIET WEAVE)							

BELT MATERIAL (Differences)	BELT THICKNESS	COVER MATERIAL	COVER HARDNESS	WEIGHT	COEFICENT OF FRICTION	
					STEEL	CARDBOARD
BELT,CZB _ _-9/16" X _ _ _'- _ _" EWX (21I008) SPARKS **MONO FLEX BU 200** E POLYURETHANE IMPREGNATION (ANTI-STATIC QUIET WEAVE)	**.075" +-.015 (RANGE .060" - .090")**	**Polyurethanre Impregnation**	**NA**	**0.35 lbs /SQUARE FOOT**	**0.20 (BOTTOM WHITE SURFACE)**	**0.23 - .28 PVC/PU (TOP COVER)**
BELT,CZB _ _-9/16" X _ _ _'- _ _" HOZ (21I006) SPARKS **MONO FLEX BP 210 QW** 2-PLY SMOOTH BLACK PVC (ANTI-STATIC QUIET WEAVE)	**.079" +-.015 (RANGE .064" - .094")**	**PVC**	**78 DUROMETER SHORE "A"**	**0.50 lbs / SQUARE FOOT**	**0.22 (BOTTOM SURFACE)**	**0.37 PVC (TOP COVER)**
BELT,CZB _ _-9/16" X _ _ _'- _ _" INC (21I007) SPARKS **MONO FLEX BP 290 QW** 2-PLY RIBBED BLACK PVC (ANTI-STATIC QUIET WEAVE)	**.102" +-.015 (RANGE .087" - .117")**	**PVC**	**45 DUROMETER SHORE "A"**	**0.72 lbs / SQUARE FOOT**	**0.22 (BOTTOM SURFACE)**	**0.95 PVC (TOP COVER)**

Mono Flex BU 200 (EWX)

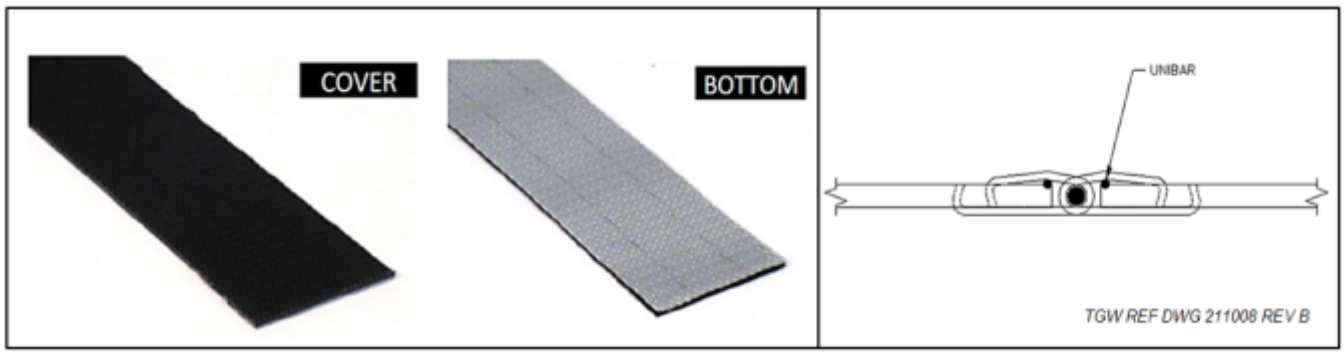

Mono Flex BP 210 QW (HOZ)

Mono Flex BP 290 QW (INC)

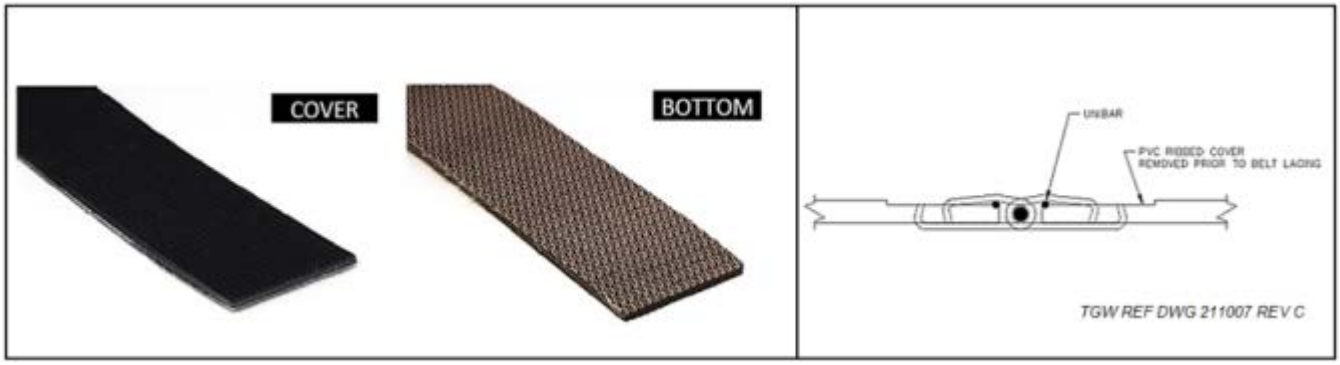

6.12 Conveyor Set Up

Place each bed in position per layout drawing.

Bolt bed butt connectors together.

Set final elevation and level unit. Conveyor must be level side-to-side and along conveyor length as shown below:

Tighten support bolts and anchor to floor.

Install any required guard rail as shown:

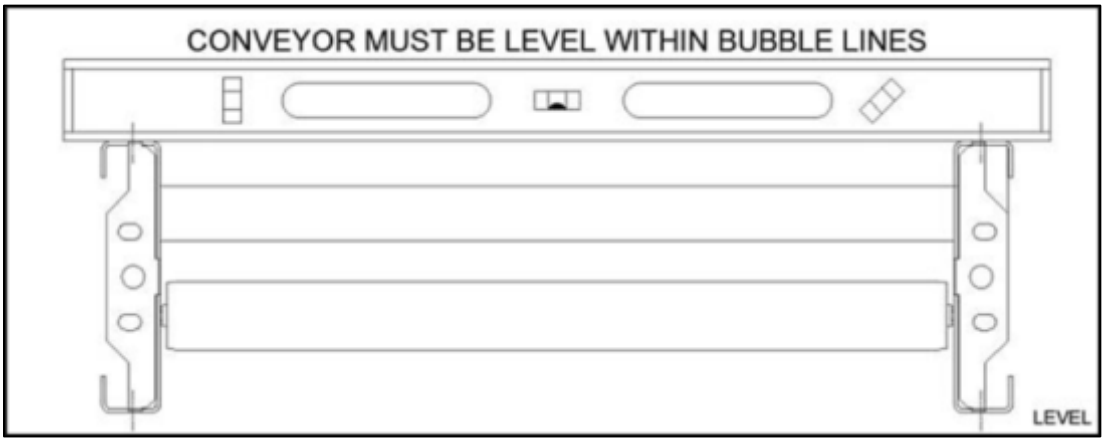

Conveyor must be level

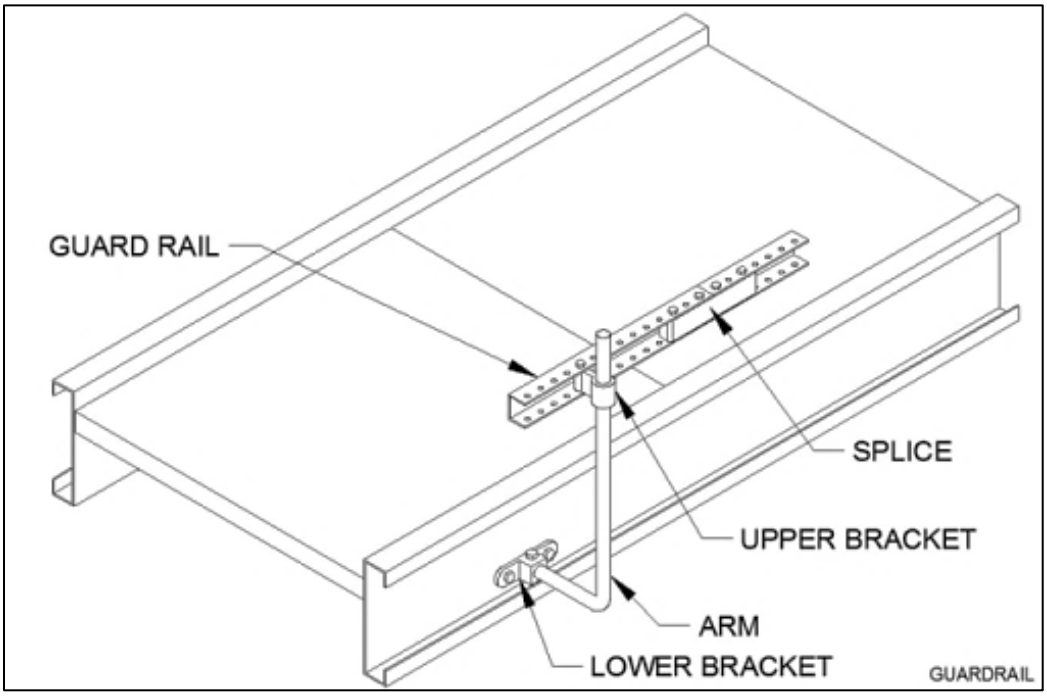

Guardrail assembly

Square end pulleys and snubbers using alignment holes. Move cam or snubber bracket until the 3/8” square alignment hole is in line with the 3/8” square in the bed frame. A 3/8” key stock can be inserted into the holes for quick alignment.

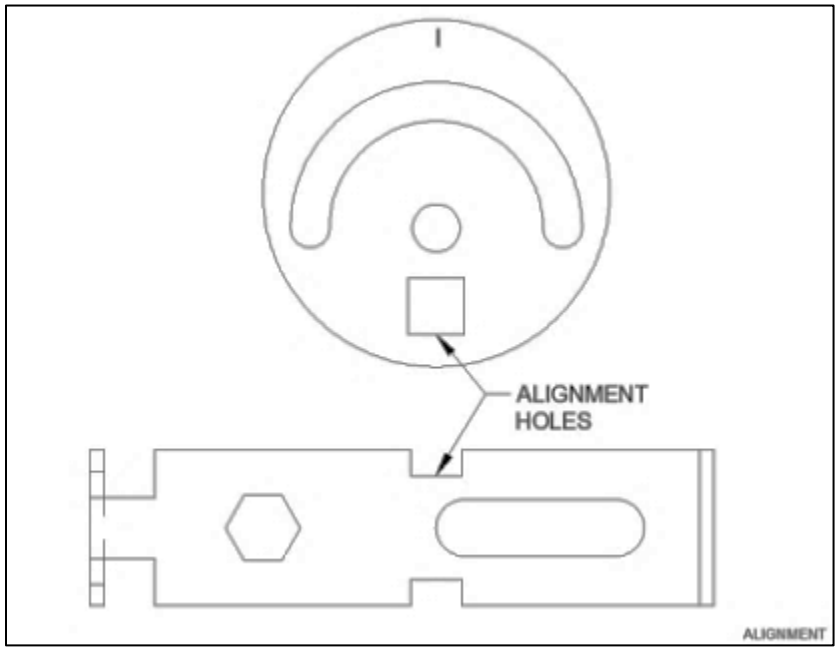

Hole Alignment

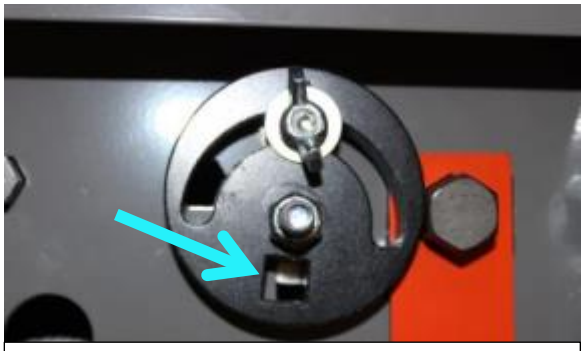

Move cam over to align square holes. (Mid-point Location)

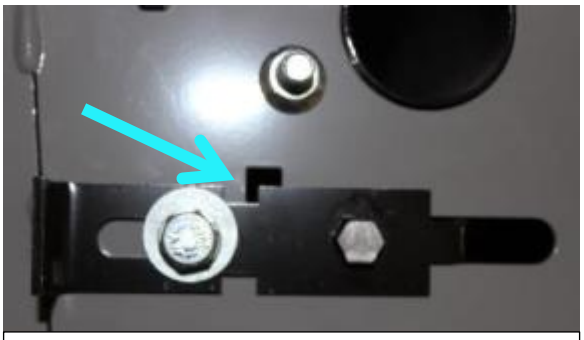

Slide snubber bracket over to align square holes. (Mid-point Location)

Locate drive. Remove both black plastic translucent shrouds and quick-release pins. Use a 3/8” ratchet with extension in the square hole of one football bracket to roll the take-up as shown. Make sure the belt is not rubbing on the side channels.

To view CRUZbelt Take-up and Tracking video visit: http://mhs-conveyor.com/media-center/maintenance-videos/80-belt-conveyor

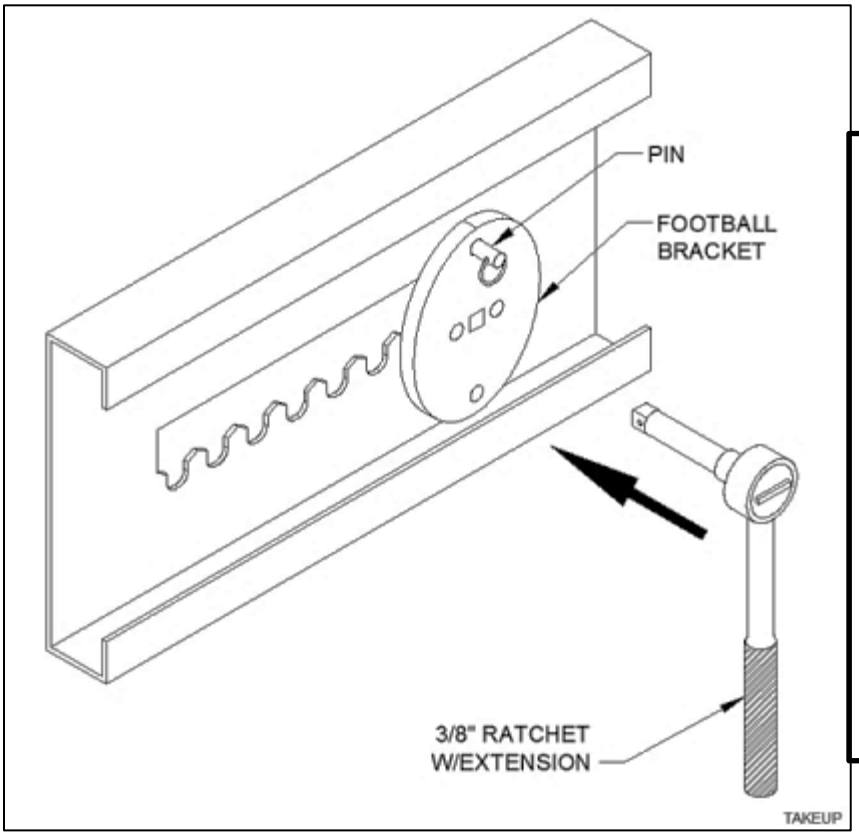

CAMS must be set vertical and aligned the same on both sides. See Caution and pictures below.

Thread belt through conveyor. Labels on drive beds show specific threading. A general belt path is shown below:

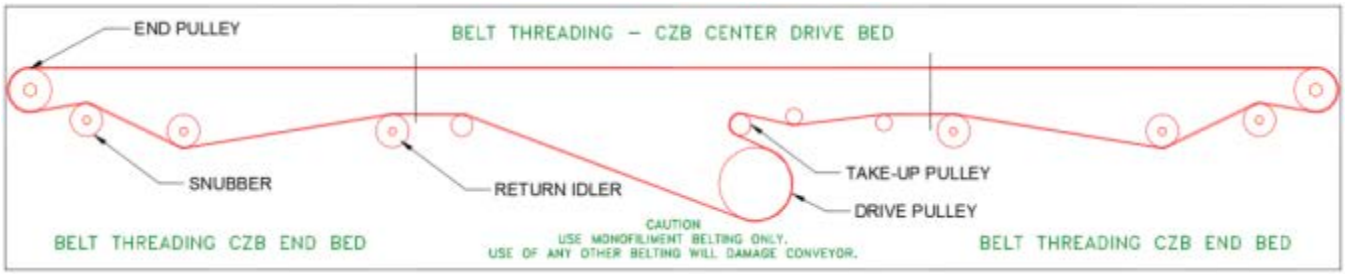

6.13 Standard CRUZbelt Lacing

CRUZbelt LACING INFORMATION	
LACING:	CLIPPER: UCM36SS12 316 STAINLESS STEEL (INSTALL LACE ON BELT WITH .065 DIA LACE PIN THRU HOOKS (P/N 1100706)
LACING PIN	CLIPPER: DSS065 316 STAINLESS STEEL WIRE CORE IN A .065 WHITE DURAPIN COATING (P/N E0034789)

Pull belt ends together and insert lacing pin.

Tension belt by rolling a football bracket away from the motor. A standard 3/8” drive ratchet will provide correct belt tension with ease. Do not over tension the belt by using a “cheater bar” on the ratchet or using two people with ratchets. Belt should be just tight enough to drive the product.

Replace quick-release pins into both football brackets as shown on bed label. One football bracket may need to be separately aligned slightly to insert the pin. Replace drive shrouds.

CAUTION

- **Do not** run the conveyor without replacing both quick release pins.
- The CAM (football bracket) **must be vertical** on both sides and the Cam must be aligned in the same vertical hole position on both sides. The Cam this must not be offset from each other. (See pictures below)
- **Do not over tighten belt** as this causes excessive stress on the Drive Drum Shaft and associated bearings.
- **Excessive belt tension** will cause premature failure of the take-up assembly.

The Cams must be vertical on each side.

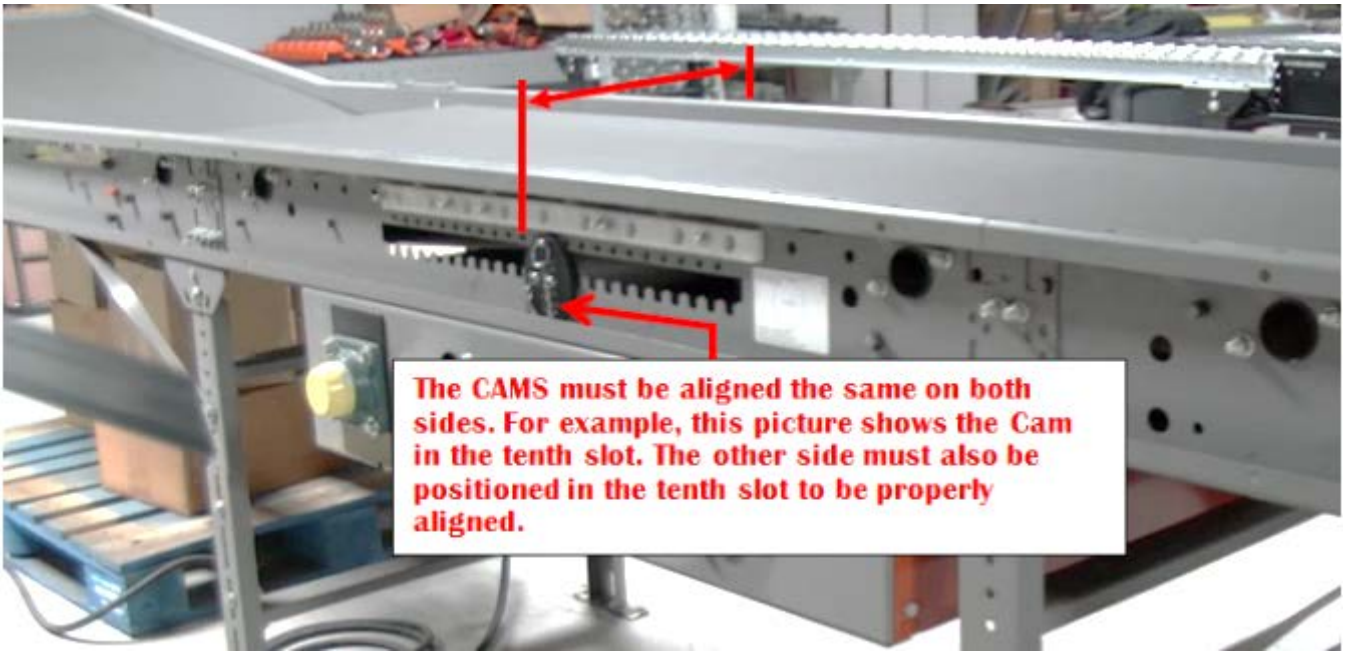

The Cams must be aligned the same on both sides.

6.14 Belt Tracking

WARNING

- Only qualified personnel should be allowed to track the belt.
- Use caution since conveyor must be run during the tracking procedure.

ALL PULLEYS AND SNUBBERS MUST BE SQUARE and conveyor must be level prior to tracking the belt. Align the 3/8” square in the cams and snubber brackets with the corresponding square in the bed frame. (See “Conveyor Set-up” section). Conveyor must be wired to run the correct direction. Belt should be tensioned tight enough to drive the heaviest product.

Belt tracking is accomplished by moving the snubber (belt return roller) tracking brackets (fine adjustments) first from their squared positions. The use of the tracking cams is a coarse adjustment that should only be used if necessary.

Tracking cams are located on the end pulleys, the drive snubbers, and near the middle of noseunders. Snubber tracking brackets are located near the ends of the conveyor on the return belt snubber/carrier rollers and near the middle of noseovers.

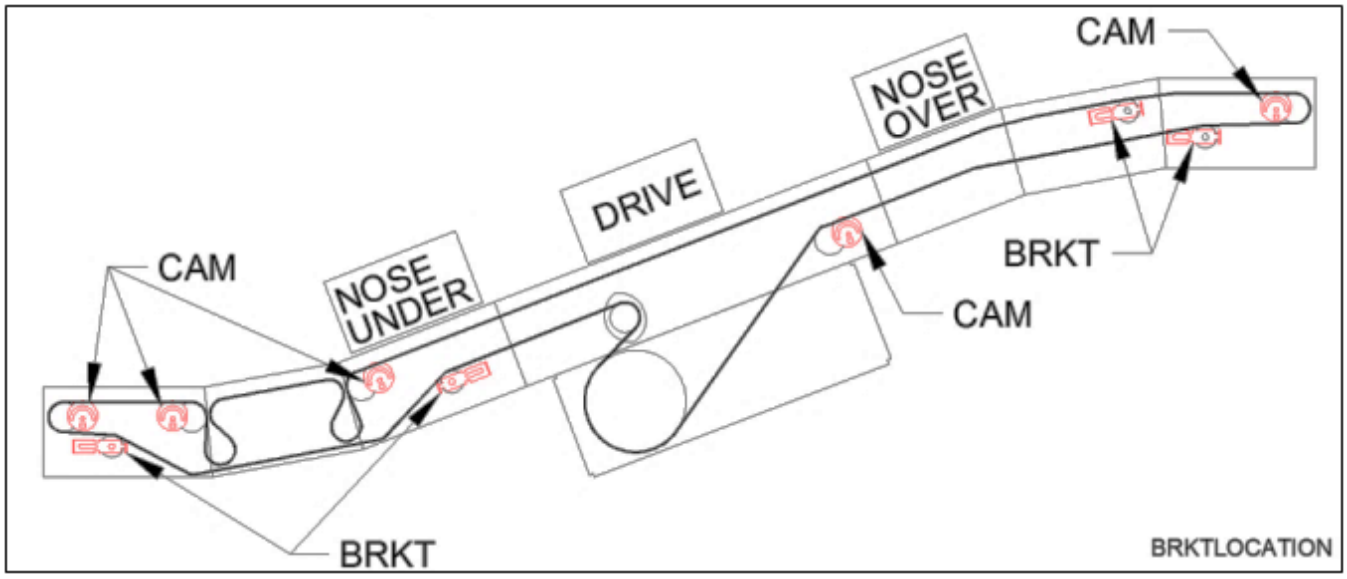

6.14.1 Tracking scenarios

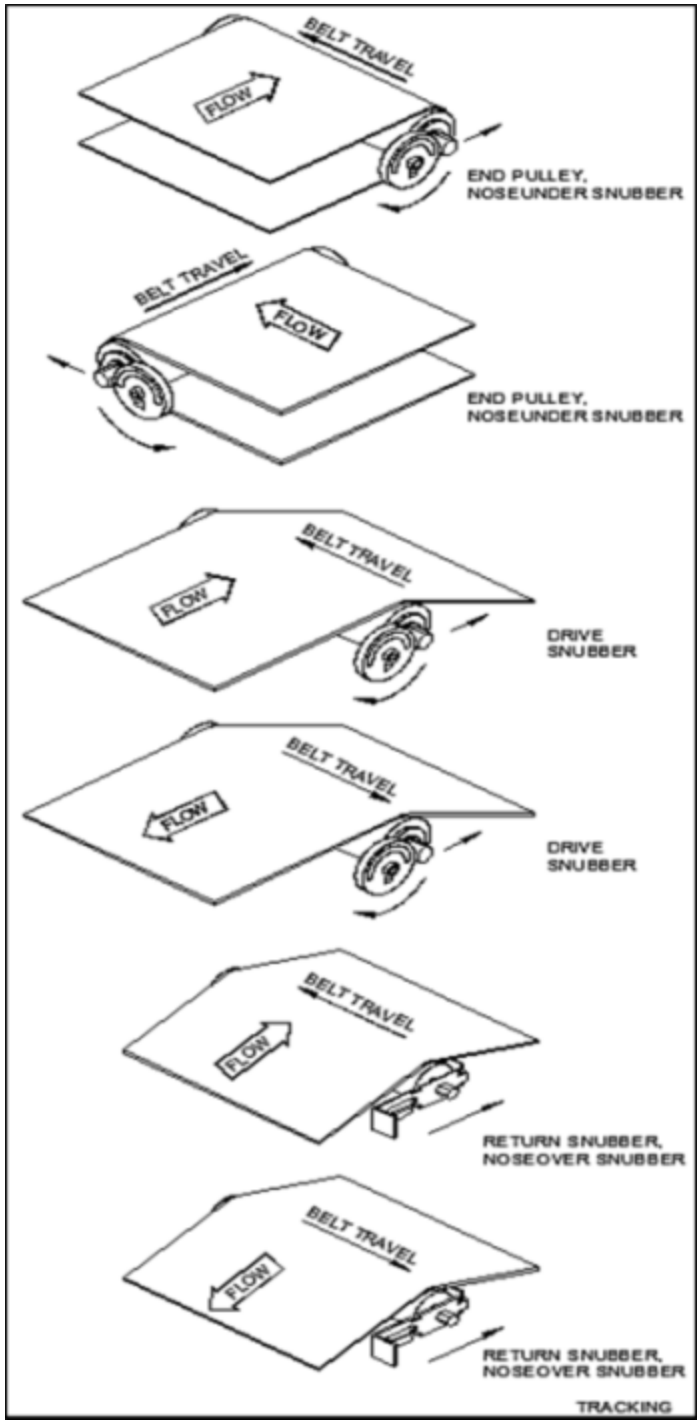

NOTE: Flow refers to belt surface flow direction not necessarily product flow.

NOTE: Belt moves towards the end of the pulley that it contacts first.

CRUZbelt is slightly different to track than other conveyors. Since the belt is only 7/16” narrower than the between frame dimension, some belt contact with the side frame is expected. However, the belt must not be allowed to contact the frame near any end pulley or snubber roller.

CAUTION

- Belt must not be allowed to contact the side frame near an end pulley or a snubber roller.

Some basic tracking information:

The belt moves TOWARD the end of a pulley it contacts first.

Use snubber tracking brackets before using tracking cams. End pulley tracking is used as a last resort.

Tracking brackets and cams affect belt movement on the next device DOWNSTREAM from the adjusted pulley. Find the nearest bracket or cam upstream from the problem area and adjust as shown.

Adjust bracket or cam slightly and watch belt for several belt revolutions before continuing to ensure the belt location is stabilized.

CAUTION

- CRUZbelt conveyor must be used with mono-filament belting. Use of any other belting will damage conveyor. Consult your MHS Conveyor distributor for belt specifications.

Chapter 7: CRUZbelt Merge

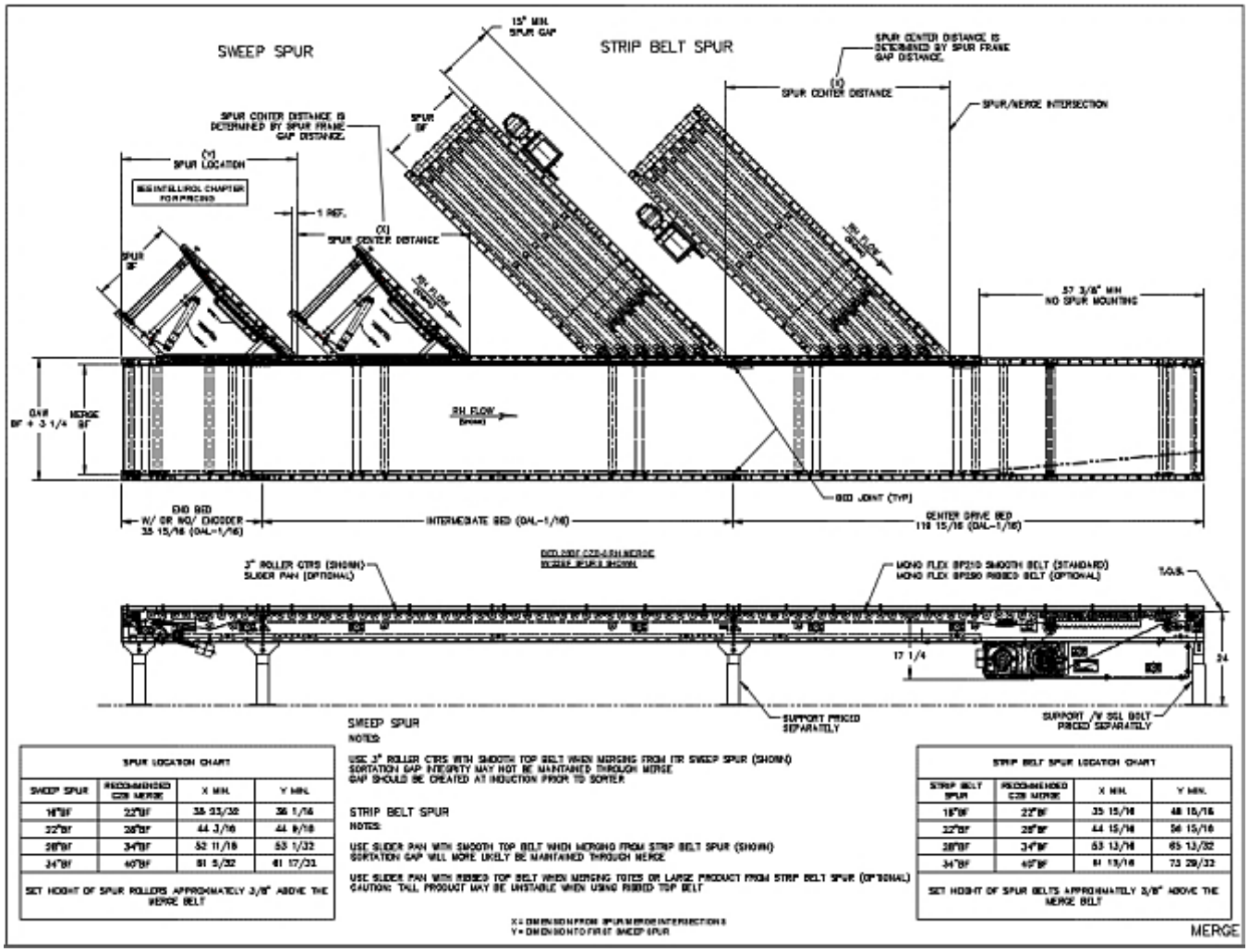

Standard Equipment

CRUZBELT WIDTH INFORMATION				
Overall Width	19-1/4"	25-1/4"	31-1/4"	37-1/4"
Between Frames	16"BF	22"BF	28"BF	34"BF
Belt Width	15-9/16"	21-9/16"	27-9/16"	33-9/16"

Belt:

Smooth top belting is used when merging which pulls the product downstream and maintains orientation. The belt is a black smooth top PVC with monofilament carcass, 100 lbs. per inch of width tensile strength; clipper lacing.

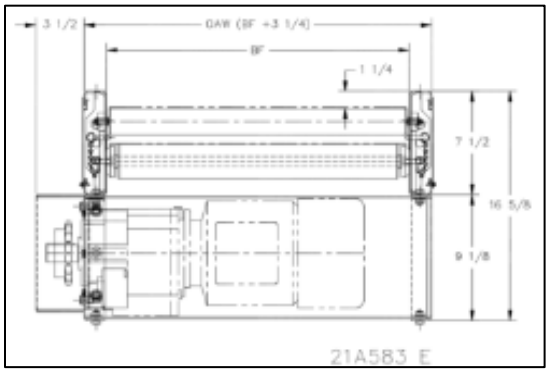

NOTE: CRUZbelt requires a monofilament belt. Installation of any other type of belt will damage the internal components of CRUZbelt. Any CRUZbelt conveyor that has any type of belt other than a monofilament belt will immediately and permanently **VOID all MHS Conveyor warranties**.

Slider Bed:

A formed slider pan between CRUZchannel frames with welded bed connectors and painted crossmembers make up the frame. Return rollers are 1.9" diameter, with precision bearings and 7/16" hex axles.

Belt-on-Roller Bed:

Belt on roller bed 3” roller centers. 1.9" O.D. 16 ga. plated shell with ABEC-1 precision bearing and 7/16" hex axle between CRUZchannel frame with welded bed connectors and painted crossmembers make up the frame. Snubber rollers are 1.9" diameter, with ABEC-1 precision bearing and 7/16" hex axle. Rollers installed at factory through 34” BF. Greater widths rollers shipped separately.

Brake motors are NOT recommended to be used with a VFD controller unless the brake is wired separately. Typical voltage for brake is 460 VAC.

A VFD or soft start is required for all drives that run at or above 200 FPM. Use the acceleration and deceleration when stopping or starting the drive.

Application

Sweep Spurs should be used when purging out a line to a final downstream accumulator prior to induction. Sweep Spurs discharge products on to the CRUZbelt Merge at rates up to 200 CPM.

The Strip Belt Spur should be used when there is a requirement to set the destination at the strip belt merge discharge and track the product from the strip belt spur to the sortation diverts location.

CRUZbelt Merge Beds

CHARGE (END) BED:

Length: 3’-0”

Roller Centers: Slider and 3” RC. Comes with or without encoder.

INTERMEDIATE BED

Lengths: 10'-0" and 5’-0”

Roller Centers: Slider and 3” RC

DRIVE / DISCHARGE BED

Length: 10’-0”

Roller Centers: Slider and 3” RC

DRIVE-TRAIN:

Use CRUZbelt center drive trains.

Chapter 8: CRUZbelt & Strip Belt Spur

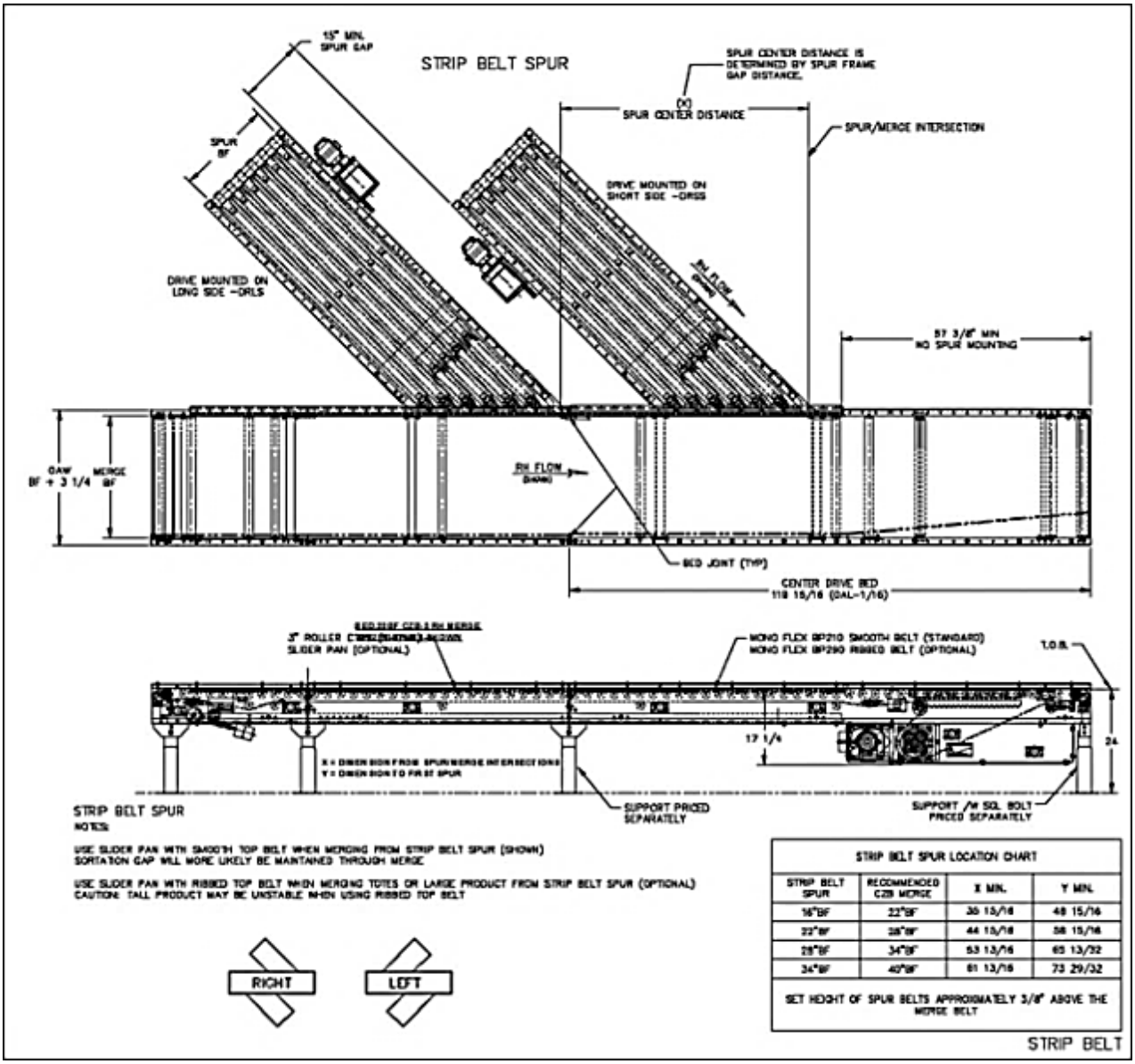

Standard Equipment

Belt:

Black rough top with clipper lacing.

CRUZBELT WIDTH INFORMATION				
Overall Width	19-1/4"	25-1/4"	31-1/4"	37-1/4"
Between Frames	16"BF	22"BF	28"BF	34"BF
Belt Width	15-9/16"	21-9/16"	27-9/16"	33-9/16"

Slider Bed:

A formed 12 ga. slider pan between 7-1/2" deep x 1-5/8" CRUZ side channels and round tubing crossmembers make up the frame with welded bed connectors. Return rollers are 1.9" precision bearings and 7/16" hex axles.

Motor:

Motor, 1 to 2 HP 208/230/460 volt, 3-phase, 60 Hz, incline helical gearmotor.

Brakes are available in 460 VAC.

A VFD or soft start is required for all drives that run at or above 200 FPM. Use the acceleration and deceleration when stopping or starting the drive.

Brake motors are not recommended to be used with a VFD controller unless the brake is wired separately. Typical voltage for brake is 460 VAC.

Speed:

Speed 103 FPM to 410 FPM available.

The Strip Belt Spur should be used when there is a requirement to set the destination at the strip belt merge discharge and track the product from the strip belt spur to the sortation diverts location.

Chapter 9: CRUZbelt Commissioning of Equipment

General

Commissioning of the equipment can best be defined as the final adjustments and test of the installed equipment required for its proper operation. The need for commissioning is inherent, since the individual components of equipment are brought together at the installation site to operate as a system.

Mechanical and electrical commissioning is most often carried out simultaneously. Commissioning must simulate the actual operation of the system as close as possible to demonstrate the ability to perform reliably at the specified rate in the prescribed operational sequence.

During the Commissioning Phase, it is necessary to load the equipment with product to be conveyed, which provides the means of detecting those areas requiring adjustment. Personnel will be required to support operational functions. This may serve as part of operator training and familiarity with the system. During the commissioning activity, special attention should be directed toward personnel safety. No unnecessary risks should be taken that would endanger the safety of any personnel. All personnel must familiarize themselves with all safety features of the system such as emergency stops and motor disconnects.

Mechanical Static Checkout

(No power to the conveyor.)

Follow the belt path through the entire conveyor. Ensure lacing is straight and fastened correctly.

Visually inspect the installation. Is the conveyor straight? Is the conveyor level within bubble lines from side to side? From end to end?

Check guard rail clearance to product.

Eliminate all catch points.

Check conveyor elevations.

All bolts and set screws tight.

Check product clearance to overhead structures.

Simulate all operational functions with actual product.

All guards in place with proper clearance.

All OSHA required guards in place on walkways, catwalks, ladder-ways, floor openings, etc.

All labels and warning signs in proper place, unobstructed.

Mechanical Dynamic Checkout

(Power to the conveyor, but no product on it.)

Turn the motor ON. With the belt moving make sure each belt has proper tension.
Check the belt tracking.

Chapter 10: CRUZbelt Preventive Maintenance & Troubleshooting

General PM

Preventive maintenance will save expensive downtime, wasted energy costs, and increase life of components. An accurate record keeping system will track component servicing history.

MHS Conveyor recommends periodic maintenance intervals. Inspection intervals may vary with load, speed, hours of operation, ambient temperature, humidity, etc. Intervals can be established by starting with a fairly frequent maintenance at first, and then lengthens the intervals as justified by observation of the need, based on history. The following schedule is based on 5 days per week, 8 hours per day operation under normal conditions.

Daily

Listen to everything for unusual noises or vibration.
Visually inspect to see that conveyor sections are clear and free of debris.
Check to see that all safety guards are in place.
Check for loose bolts or parts.

Weekly

Check belt for wear and proper tension.
Check belt tracking.
Check belt lacing.

Monthly

Inspect Gearmotor for leaking seals and the breather plug for dirt and debris.
Inspect chain & sprocket, pulley, and belts. See below for details.

Semi Annual

Check the bearings for grease (Do not over grease).
Inspect pulleys and rollers for build-up of debris.

Annual

A complete inspection of conveyor equipment, parts, and proper operations to include safety tests. MHS Conveyor recommend inspecting for the following but not limited to:

WARNING

- Prohibit walking or riding on conveyor by anyone.
- Care should be taken when servicing any conveyor to prevent accidental injury.
- All moving parts are potentially dangerous.

WARNING

- Do not perform maintenance on the conveyor until the start-up controls, including motor safety switches, are locked out and cannot be turned by any person other than the one performing the maintenance.
- If more than one member of a crew is working on the conveyor, EACH CREW MEMBER MUST HAVE A LOCK ON THE POWER LOCK OUT. The air pressure must be turned off to the work area. All pneumatic devices must be de-energized to prevent accidental cycling of the device.
- Check the loosened parts have been retightened and all guards reinstalled.
- Make sure personnel are clear of all conveyor equipment before restarting the system.

Gearmotor

The drive unit should be checked monthly. Check the motor gear case for leaking seals. Check breather on the gear case for dirt accumulation.

Chains and Sprockets

Chains and sprockets should be checked monthly. If either the sprockets or the chain is worn, both should be replaced. Sprockets must be checked for alignment with a straight edge. Clean the chain with a non-flammable solvent and lubricate with 30W synthetic oil. A brush is recommended for oil application.

Check chain tension after initial run-in and then monthly. Tension should be slightly slack, as shown:

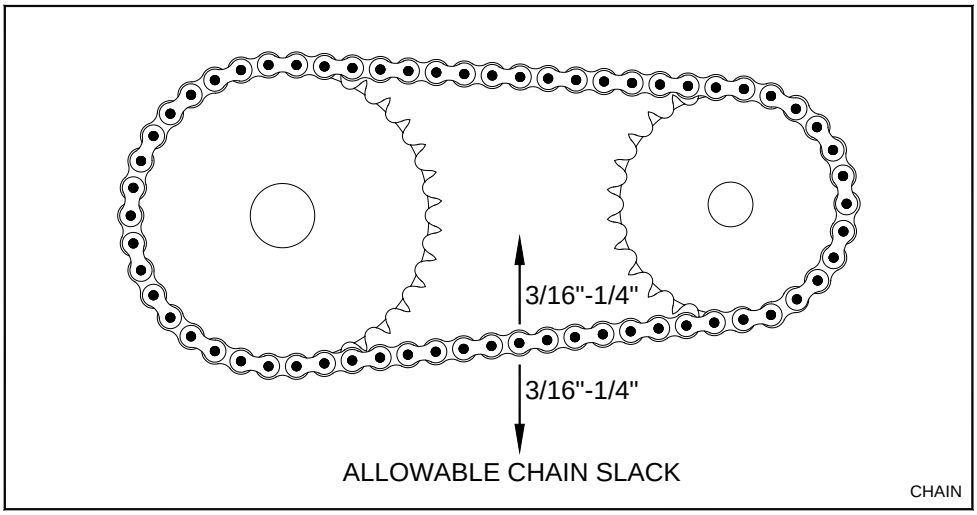

Rollers

Inspect rollers periodically for debris build-up.

Belts

Belts normally need very little care. Clean monthly with compressed air or a stiff brush.

CAUTION
• Do not use petroleum-based products to clean the belt.

Regreasable Bearings

The drive unit and power take-off have re-greasable bearings. These bearings should be lubricated once during the first six months of operation. Over-greasing will pass grease through the bearing seals/shields and will draw dirt to the bearing. These bearing rotate at a relatively slow speed and should not use grease on a continuing basis.

10.1 Belt Troubleshooting Guide

	Problem Belt	Possible Cause	Remedy
1.	Belt stopped or moving slower than normal, reducer output shaft is turning properly and all electrical components are operating normally.	Chain is loose and is skipping sprocket teeth	Tension chain. Check sprocket alignment, check for worn teeth.
		Belt has separated	Replace the entire belt or cut out damaged portion and add new piece with extra lacings.
		Bearings have failed	Locate and replace the bearings
		Belt slipping on drive pulley	See #2 below
		Belt lacing pulled out	See #3 below
		Improper belt tension	Re-tension take-up pulley
		Drive sprocket loose on shaft	Re-tighten sprocket and check for shaft wear
		Belt jammed due to obstruction	Check belt path and remove any obstruction
		Belt mis-tracked on return side	Reference Belt Tracking procedure.
2.	Belt slipping on drive pulley	Take-up pulley not adjusted properly	Adjust take-up cam in small increments. Do not over-tighten.
		Drive pulley lagging or pulley side of belt is slippery	Replace pulley if lagging worn smooth. If slipping is caused by foreign substances in the lagging or bottom of belt, clean by scraping or wire brushing. Do not use solvents on belt or pulley lagging.
		New belt has stretched	Normal. Re-adjusted take-up.
		Seized end pulley or snubber roller bearings	Check and replace as required
		Load too heavy	Remove as required. Re-analyze needs.
		Belt threaded improperly	Check belt path per this manual
3.	Belt lacing pulling out	Tension too high	Reduce belt tension at take-up pulley
		Obstruction	Remove obstruction
		Lacing worn out	Replace lacing with Clipper #UCM36SS12

	Problem Belt	Possible Cause	Remedy
4.	Belt runs to one side	Rollers preceding and at trouble point are not square	Check alignment of pulleys and rollers. Adjust pulleys and rollers as required. See Belt Tracking section of this manual.
		Build-up of foreign material on rollers and pulleys	Clean rollers and pulleys. Do not use solvents.
		Conveyor not level	Level conveyor bed
		Bowed belt	If belt is new, load tension may straighten it. Otherwise, replace.
		Pulley bearing set screws loose allowing pulleys to walk to one side	Loosen belt and reposition the pulley centered in the frame. Retighten the set screws and center the belt on the pulley.
		Worn bearings	Check and replace.
		Belt not joined securely at lacing	Re-cut belt ends square and re- lace.
		Off center loading	Correct loading conditions.
5.	Rips at or near edge of belting	Obstruction	Remove obstruction
		Belt running against conveyor frame	See Belt Tracking section of this manual.
		Loose lacing	Check lacing for tightness and general condition. Check if belt is chamfered on corners.
6.	Conveyor belt jerks during operation	Too much slack in drive chain which is jumping the sprocket	Adjust chain tension, check for worn sprockets.
		Chain climbing the sprocket	See “Chains & Sprockets” #8
7.	Gouging of top cover	Obstruction	Locate and remove obstruction
		Damaged return idler or snubber pulley	Verify return idlers and snubber pulleys are spinning freely and have no material build-up.
8.	Severe wear on drive pulley side of belting	Belt slipping on drive pulley	See #2 above
		Frozen or sticking rollers or pulleys	Replace bad pulleys or rollers
		Slider bed damage or misalignment	Check slider bed for smoothness and alignment at joints
9.	Excessive belt stretching	Tension too great	Reduce belt tension by take-up adjustment

10.2 Gearmotor Troubleshooting Guide

	Problem - Motor/Reducer	Possible Cause	Remedy
1.	Motor will not start	No line voltage	Check emergency stops and reset. Check fuses and wiring for open circuit. Check thermal overload protection device. Check limit switches, starter and relays for faulty contacts or mechanical fault. Check voltage at source. Check control circuit voltage.
		Low line voltage	Check for low resistance short on line.
		Conveyor overloaded or jammed	Check for foreign material in chain and sprockets. Check for material between belt and pulleys. Check conveyor belt tension. Remove product overloading from conveyor and address cause. Check chain tension.
		Burned out motor	Replace motor with spare and send defective motor to authorized repair station.
		Failure of electrical component	Check photoelectric control relay, timing modules and start/stop pushbuttons.
2.	Motor running excessively hot **Note: Temperature up to 175º (hot to touch) is normal.**	Drag on conveyor	Inspect entire conveyor for obstruction or falling bearings.
		Lack of reducer lubricant	Check oil level in gear case. Be sure breather plug is open (if used).
		Too much lubrication	Drain off excess
		Frozen pulley or roller	Check all pulleys and bearings for free rotation. Replace if frozen or difficult to rotate.
		Wrong grade oil	Drain and refill with proper grade
		Electrical	Check wiring and circuits. Take ampere reading and compare with motor rating on name plate.
		Key ramped up on the motor shaft, causing excessive bearing load.	Remove motor to reducer mounting belts. Pull motor back and reposition key, push motor back onto reducer. Binding or excessive resistance should not be felt.
		Overloaded conveyor	Remove excess product. Address cause.
		Mis-threading belt path	Reroute belt path correctly
3.	Reducer runs – drive pulley does not turn	Drive chain broken or disconnected	Replace chain or repair
		Sprockets loose. Also see “Bearings” #8, Chain & sprockets #2 and #6.	Check key and tighten set screws

	Problem - Motor/Reducer	Possible Cause	Remedy
4.	Reducer leaks oil	Defective oil seals on output shaft	Install new oil seals. Replace reducer with spare and send defective reducer to authorized repair facility.
		Oil level too high	Drain off excess
		Loose bearing cover bolts	Tighten as required
		Incorrect size	Check size and replace if necessary
5.	Thermal protectors kicking out	Short in motor	See “Motor Will Not Start”
		Excessive amps being pulled	Reset starter and check ampere draw. Check for conveyor overload.
6.	Starter overloads kicking out	Poor ventilation in control panel	Add vents or fan
		Electrical	Check circuits and panel. Check heater size.
7.	Repeated stalling	Excessive product loads	Check if loads or rates have increased since purchase of conveyor
		Motor wiring	Check motor wiring
		Overload on motor	Check conveyor for obstruction causing drag or bearing failure. Check for excessive product load.
8.	Slow to start	Electrical	Check circuits and panel. Take ampere reading.
9.	Excessive noise or motor hums	Lack of lubrication	Check oil level in gear case
		Damaged gears	Replace reducer
		Loose mounting	Tighten bolts
		Faulty bearing	Replace bearing
10.	Motor will run but reducer does not turn	Worn gear in reducer	Replace reducer with spare and send defective reducer to authorized repair station.
		Key between motor and reducer missing	Replace key
11.	Electrical shorts	Loose connection	Check all wire connections. Check fuses.

10.3 Chain & Sprocket Troubleshooting Guide

	Problem - Chain & Sprocket	Possible Cause	Remedy
1.	Excessive slack	Normal wear	Expect rapid chain growth in first two weeks of operation. Check
2.	Sprocket loose on shaft	Loose set screws	Realign sprockets with straight edge and
3.	Wear on tips of sprocket teeth	Chain elongated	Replace chain and sprockets
4.	Abnormal wear on chain or sprockets	Excessive chain tension	Align sprockets and reduce tension to 1/4"
		Sprockets misaligned	Realign with straight edge across
		Chain not adequately lubricated	Lubricate chain with approved lubricant;
		Damaged sprocket or chain	Replace damaged component. Check alignment.
		Dirty chain	Clean thoroughly and use approved

10.4 Bearings Troubleshooting Guide

	Problem - Bearings	Possible Cause	Remedy
1.	Excessive vibration	Bearing brinnelled	Locate and replace
2.	Bearing runs	No lubrication	Add approved lubricant
3.	Noise (intermittent)	Loose mounting bolts	Check security or mounting bolts
4.	Shaft rotation in bearing bore	Eccentric locking collar or hub loose	Tighten locking collar in the direction of shaft rotation and/or tighten set
5.	Noise (low pitch)	Bearing brinnelled	Replace
6.	Rough spots felt when	Bearing worn	Replace
7.	Bearing squeals or	Bearing has defect	Replace
8.	Pulley or roller does not turn	Bearing frozen	Replace bearing or complete roller
		Key sheared off in pulley hub	Check loading. Check
		Set screws slipping on shaft	Tighten and check shaft

Chapter 11: CRUZbelt Replacement Parts Identification

This section is used to identify parts that may require replacement during the life of the conveyor.

Parts that specifically pertain to CRUZbelt are included with illustrations.

A "Recommended Spare Parts List" is published for all conveyor orders of $20,000 or more. This spare parts list is sent to the purchaser approximately (2) weeks after the order is received. It includes part numbers, description, pricing and recommended quantities to be kept on hand for maintenance.

If you are unable to locate this document another may be obtained by contacting the MHS Conveyor Lifetime Services at 231-798-4547 or Fax 231-798-4549.

11.1 Spare Parts Priority Level Explanations

Level #1

Failure of a priority level #1 spare part (“A” level part) may cause major disruption of system performance.

Priority level 1 spare parts must be on-hand, and available to be replaced in the event of a component failure that could shut down a critical function of a conveyor system.

Priority level 1 spare parts include motors, gear reducers, gearmotor, motorized rollers, air solenoid valves, and related components. The majorities of these parts are purchased from MHS Conveyor vendors and carry their own warranties through these vendors. For more warranty information, see MHS Conveyor Equipment Warranty.

Level #2

Failure of a priority level #2 spare parts (“B” level part) usually is gradual and should not cause a major system disruption.

Priority level 2 spare parts are parts required for smooth system operation and preventative or regular mechanical maintenance.

Priority level 2 spare parts include roller chain, sprockets, belt pulleys, rollers, air cylinders, and other related parts whose failure should not stop a conveyor system suddenly. These parts tend to wear out gradually and are not know to fail suddenly.

Level #3

Priority level #3 parts (“C” level part) rarely fails and are easily obtainable.

Priority level 3 spare parts are parts that rarely fail or maybe optionally used by the customer.

11.2 CRUZbelt Intermediate Bed – Belt On Roller

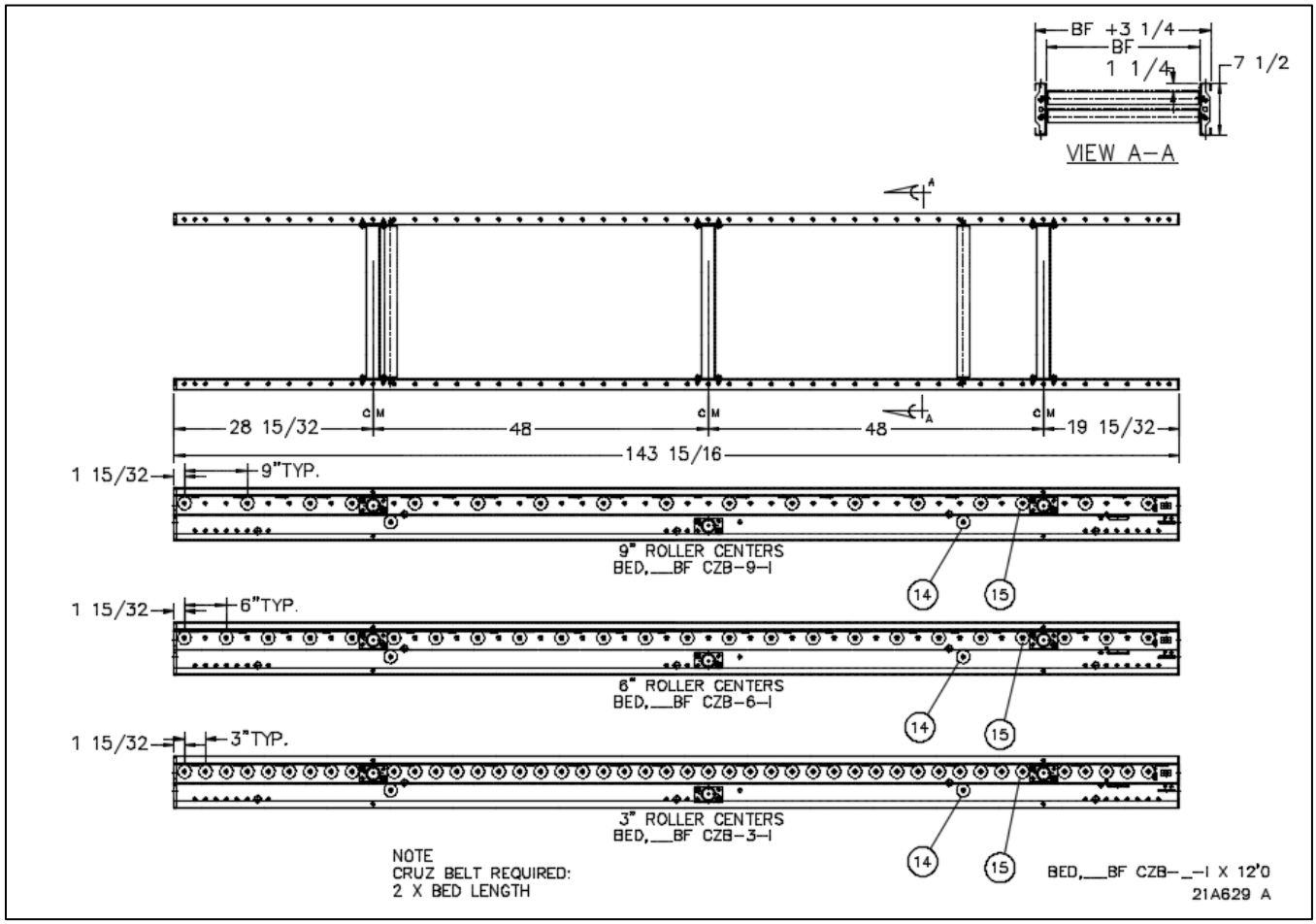

11.2.1 CRUZbelt Intermediate Bed

REPLACEMENT PARTS FOR CRUZBELT INTERMEDIATE BED					
BALLOON	**DESCRIPTION**	**Widths & Part #s**			
		16" BF	**22" BF**	**28" BF**	**34" BF**
14	ROLLER,_ _CZB 1.9 SNUBBER PRBG	E0009652	E0009653	E0009654	E0009655
15	ROLLER,_ _"GRAV 1.9 PLTD PRBG	60218009	60224009	60230009	60236009
					Bed Reference Dwg. #21A629A

11.3 CRUZbelt End Beds - Belt On Roller

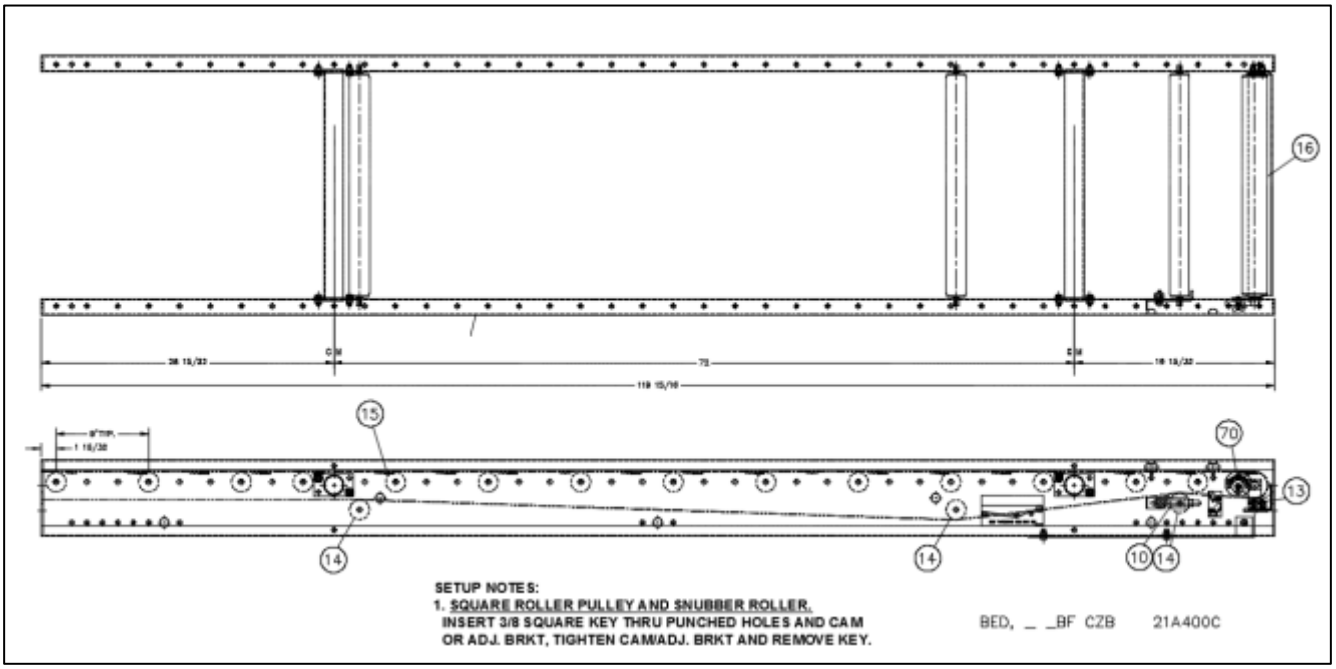

11.3.1 CRUZbelt End Beds

REPLACEMENT PARTS FOR CRUZBELT END BEDS					
		Widths & Part #s			
BALLOON	DESCRIPTION	16" BF	22" BF	28" BF	34" BF
10	BRKT,CZB SNUBBER ADJ.	E0009408			
13	GUARD,FINGER _ _CZB (HANDED)	E0034991	E0034992	E0034993	E0034994
14	ROLLER, _ _CZB 1.9 SNUBBER	E0009652	E0009653	E0009654	E0009655
15	ROLLER, _ _" GRAV 1.9 PLTD PRBG	60218009	60224009	60230009	60236009
16	PULLEY, _ _CZB 2.5 DIA 1/4W	E0040390	E0040391	E0040392	E0040393
70	CAM,ASY CZB	E0038393			
					Bed Reference Dwg. #21A400C

11.4 CRUZbelt Center Drives - Belt On Roller

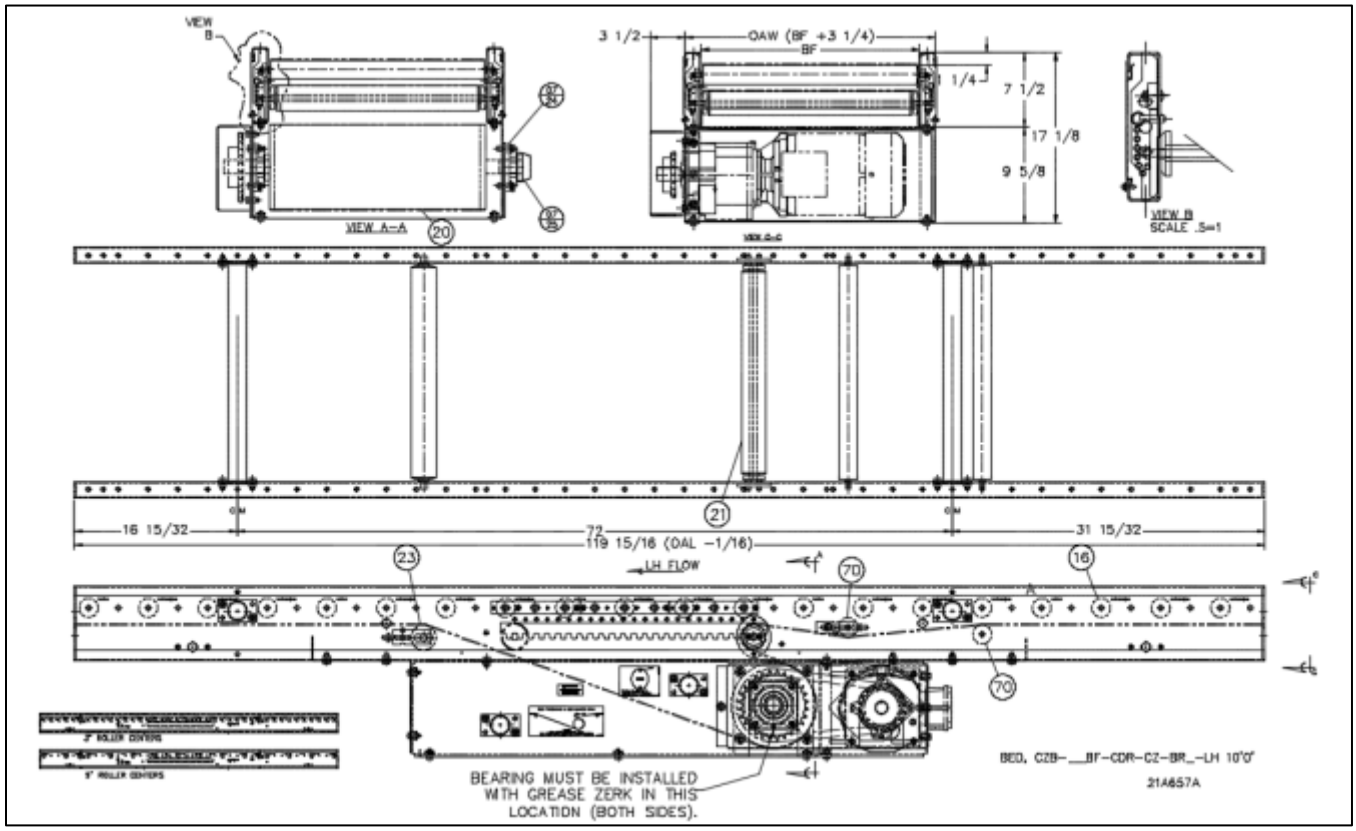

11.4.1 CRUZbelt Center Drives (BOR)

REPLACEMENT PARTS FOR CRUZbelt CENTER DRIVE BOR					
		Widths & Part #s			
BALLOON	**DESCRIPTION**	**16" BF**	**22" BF**	**28" BF**	**34" BF**
07/24	BRG, FLG 4BOLT X 1-7/16"	1114091			
07/25	BEARING END SAFTY CAP	1114092			
16	ROLLER, _ _"GRAV 1.9 PLTD PRBG	60218009	60224009	60230009	60236009
20	PULLEY, WLDMT 8" _ _BF CZB CDR	1158680	1158681	1158682	1158683
21	PULLEY, _ _CZB DR 2.5 DIA 1/4W	E0040400	E0040401	E0040402	E0040403
23	ROLLER, SNUB _ _BF 11/16 AXLE	18218001	18224001	18230001	18236001
70	ROLLER, _ _CZB 1.9 SNUBBER PRBG	E0009658	E0009653	E0009654	E0009655
					Bed Reference Dwg. #21A657A

11.5 CRUZbelt Merge Drive Bed

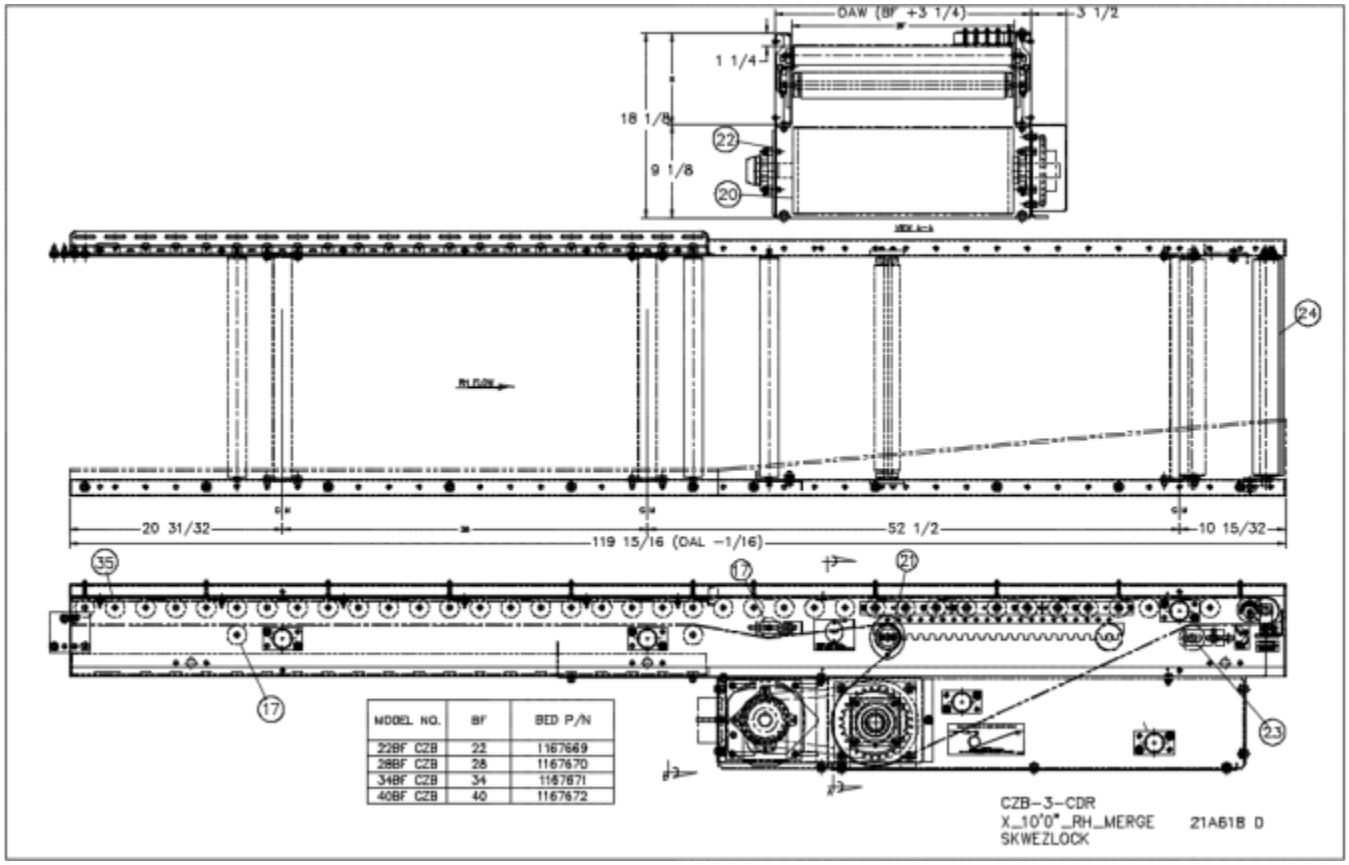

11.5.1 CRUZbelt Merge Drive

REPLACEMENT PARTS FOR CRUZBELT MERGE DRIVE					
BALLOON	**DESCRIPTION**	**Widths & Part #s**			
		22" BF	**28" BF**	**34" BF**	**40" BF**
17	ROLLER,_ _CZB 1.9 SNUBBER PRBG (W/PRECISION BREARING)	E0009653	E0009654	E0009655	E0009656
20	PULLEY,WLDMT 8" _ _BF CZB CDR	1158681	1158682	1158683	1161079
21	PULLEY,_ _CZB DR 2.5 DIA 1/4W	E0040401	E0040402	E0040403	E0040404
22	BRG,FLG 4BOLT X 1-7/16" F4B-DL-107, CONCENTRIC CLAMP COLLAR,D-LOCK	1114091			
23	ROLLER,SNUB _ _BF 11/16AXLE	18224001	18230001	18236001	18242001
24	PULLEY,_ _CZB 2.5 DIA 1/4	E0040391	E0040392	E0040393	E0040394
35	ROLLER,_ _"GRAV 1.9 PLTD PRBG (W/PRECISION BREARING)	60224009	60230009	60236009	E0040394
					Bed Reference Dwg. #21A618D

11.6 CRUZbelt Drive Train

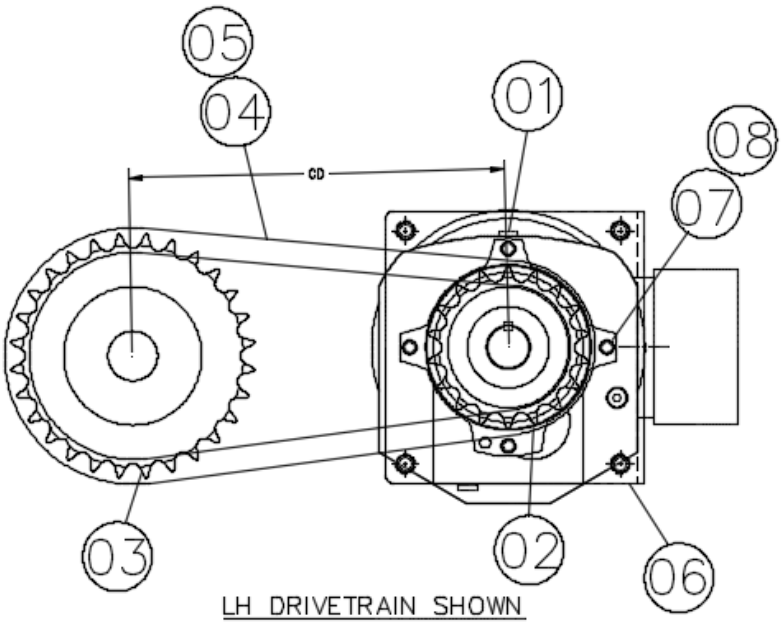

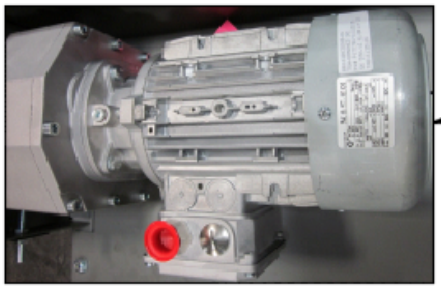

NOTE: IMPORTANT! AFTER MOTOR HAS BEEN INSTALLED ON BED, ATTACH NORD MOTOR STICKER TO FAN COVER. THE STICKER IS TO BE PLACED, SO THAT WHEN THE BED IS IN THE INSTALLED POSITION, IT IS VISIBLE WHEN VIEWED FROM BELOW.

DRIVE TRAIN CZB 8CDR
21S012 REV H

11.6.1 CRUZbelt RH & LH Center Drive Trains Chain Driven

REPLACEMENT PARTS FOR CRUZBELT RH & LH CENTER DRIVE TRAIN										DRIVE TRAINS	
Balloon #		1						2	3	4	5
FPM	HP	RH DR-TRAIN P/N	LH DR-TRAIN P/N	BRAKE OPTION	RH GEAR-MTR P/N	LH GEAR-MTR P/N	REDUCER SIZE IT 01	DRIVE SPROCKET	DRIVEN SPROCKET	CHAIN	MASTER LINK
30	1	1187093	1187090		1187105	1187103	SK573.1Z-VL-80 LP/4	1118407 H6015T 1-1/4"BORE	1118285 28T 1-7/16" BORE	90140032 PEER # 60 ROLLER CHAIN	90440107 PEER # 60 MASTER LINK
		1187094	1187091	BRAKE	1187106	1187104					
45		1187099	1187097		1187109	1187107	SK572.1Z-VL-80 LP/4	1118352 H6016T 1-1/4"BORE	1118285 28T 1-7/16" BORE		
		1187100	1187098	BRAKE	1187110	1187108					
60		1135401	1135398		1135095	1135093	SK373.1Z-VL-80 LP/4	1118303 H6015T 1"BORE	1118285 28T 1-7/16" BORE		
		1135402	1135400	BRAKE	1135096	1135094					
75		1135411	1135408		1135103	1135101	SK372.1Z-VL-80 LP/4	1118303 H6015T 1"BORE	1118285 28T 1-7/16" BORE		
		1135412	1135410	BRAKE	1135104	1135102					
	1.5	1135416	1135413		1135107	1135105	SK572.1Z-VL-90 SP/4	1118352 H6016T 1-1/4"BORE	1118264 27T 1-7/16" BORE		
		1135417	1135415	BRAKE	1135108	1135106					
90	1	1135420	1135418		1135113	1135111	SK372.1Z-VL-80 LP/4	1118277 H6016T 1"BORE	1118285 28T 1-7/16" BORE		
		1135421	1135419	BRAKE	1135114	1135112					
	1.5	1135424	1135422		1135117	1135115	SK373.1Z-VL-90 SP/4	1118277 H6016T 1"BORE	1118285 28T 1-7/16" BORE		
		1135425	1135423	BRAKE	1135118	1135116					
105	1	1169621	1169619		1169626	1169624	SK372.1Z-VL-80 LP/4	1118277 H6016T 1"BORE	1118264 27T 1-7/16" BORE		
		1169622	1169620	BRAKE	1169627	1169625					
	1.5	1135442	1135440		1135121	1135119	SK372.1Z-VL-90 SP/4	1118277 H6016T 1"BORE	1118264 27T 1-7/16" BORE		
		1135443	1135441	BRAKE	1135122	1135120					
	2	1135446	1135444		1135126	1135123	SK572.1Z-VL-90 LP/4	1118352 H6016T 1-1/4"BORE	1118273 26T 1-7/16" BORE		
		1135447	1135445	BRAKE	1135127	1135125					
120	1.5	1135450	1135448		1135130	1135128	SK372.1Z-VL-90 SP/4	1118298 H6017T 1"BORE	1118285 28T 1-7/16" BORE		
		1135451	1135449	BRAKE	1135131	1135129					
	2	1135454	1135452		1135135	1135132	SK572.1Z-VL-90 LP/4	1118352 H6016T 1-1/4"BORE	1118285 28T 1-7/16" BORE		
		1135455	1135453	BRAKE	1135136	1135133					
135	1.5	1135458	1135456		1135139	1135137	SK372.1Z-VL-90 SP/4	1118298 H6017T 1"BORE	1118285 28T 1-7/16" BORE		
		1135459	1135457	BRAKE	1135140	1135138					
	2	1135462	1135460		1135143	1135141	SK372.1Z-VL-90 LP/4	1118303 H6015T 1"BORE	1118285 28T 1-7/16" BORE		
		1135463	1135461	BRAKE	1135144	1135142					
	3	1135466	1135464		1135152	1135148	SK572.1Z-VL-100 LP/4	1118352 H6016T 1-1/4"BORE	1118264 27T 1-7/16" BORE		
		1135467	1135465	BRAKE	1135153	1135150					
150	1.5	1135470	1135468		1135156	1135154	SK372.1Z-VL-90 SP/4	1118277 H6016T 1"BORE	1118264 27T 1-7/16" BORE		
		1135471	1135469	BRAKE	1135157	1135155					
	2	1135474	1135472		1135143	1135141	SK372.1Z-VL-90 LP/4	1118277 H6016T 1"BORE	1118264 27T 1-7/16" BORE		
		1135475	1135473	BRAKE	1135144	1135142					
	3	1135478	1135476		1135160	1135158	SK572.1Z-VL-100 LP/4	1118352 H6016T 1-1/4"BORE	1118273 26T 1-7/16" BORE		
		1135479	1135477	BRAKE	1135161	1135159					
180	1.5	1169601	1169599		1147320	1147316	SK372.1Z-VL-90 SP/4	1118277 H6016T 1"BORE	1118285 28T 1-7/16" BORE		
		1169602	1169600	BRAKE	1169608	1169607					
	3	1135493	1135491		1135168	1135166	SK572.1Z-VL-100 LP/4	1118352 H6016T 1-1/4"BORE	1118273 26T 1-7/16" BORE		
		1135494	1135492	BRAKE	1135169	1135167					
210	2	1160550	1160548		1160529	1160527	SK372.1Z-VL-90 LP/4	1118277 H6016T 1"BORE	1118264 27T 1-7/16" BORE		
		1160551	1160549	BRAKE	1160530	1160528					
	5	1160554	1160552		1160533	1160531	SK572.1Z-VL-112 MP/4	1118352 H6016T 1-1/4"BORE	1118273 26T 1-7/16" BORE		
		1160555	1160553	BRAKE	1160534	1160532					
240	2	1160558	1160556		1160537	1160535	SK372.1Z-VL-90 LP/4	1118277 H6016T 1"BORE	1118273 26T 1-7/16" BORE		
		1160559	1160557	BRAKE	1160538	1160536					
	5	1160562	1160560		1160541	1160539	SK572.1Z-VL-112 MP/4	1118352 H6016T 1-1/4"BORE	1118285 28T 1-7/16" BORE		
		1160563	1160561	BRAKE	1160542	1160540					

Drive-Train Ref Dwg # 21S012 H

11.6.2 CRUZbelt Timing Belt

REPLACEMENT PARTS FOR CRUZBELT RH & LH TIMING BELT									
Balloon #		1						2	3
FPM	HP	RH DR-TRAIN P/N	LH DR-TRAIN P/N	BRAKE OPTION	RH GEAR-MTR P/N	LH GEAR-MTR P/N	REDUCER SIZE IT 01	DRIVE SPROCKET	DRIVEN SPROCKET
90	1	1135502	1135500		1135179	1135174	SK573.1Z-VL-80 LP4	E0038328 PULLEY,GATES POLY 8MX-45S-36	E0033834 PULLEY,GATES POLY 8MX-48S-36
		1135503	1135501	BRAKE	1135180	1135175			
	1 1/2	1135507	1135504		1135183	1135504	SK572.1Z-VL-90 SP4	E0033834 PULLEY,GATES POLY 8MX-48S-36	E0038985 PULLEY,GATES 8MX-63S-36
		1135508	1135506	BRAKE	1135184	1135182			
105	1	1135515	1135513		1135187	1135185	SK572.1Z-VL-80 LP4	E0038983 PULLEY,GATES 8MX-41S-36	E0034781 PULLEY,GATES 8MX-40S-36
		1135516	1135514	BRAKE	1135188	1135186			
	1 1/2	1169616	1169614		1135278	1135197	SK572.1Z-VL-90 SP4	E0033834 PULLEY,GATES POLY 8MX-48S-36	E0038985 PULLEY,GATES 8MX-63S-36
		1169617	1169615	BRAKE	1135279	1135277			
	2	1135519	1135517		1135191	1135189	SK572.1Z-VL-90 LP4	E0033834 PULLEY,GATES POLY 8MX-48S-36	E0038985 PULLEY,GATES 8MX-63S-36
		1135520	1135518	BRAKE	1135192	1135190			
120	1	1135523	1135521		1135195	1135193	SK572.1Z-VL-80 LP4	E0033834 PULLEY,GATES POLY 8MX-48S-36	E0033835 PULLEY,GATES 8MX-50S-36
		1135524	1135522	BRAKE	1135196	1135194			
	2	1135527	1135525		1135126	1135123	SK572.1Z-VL-90 LP4	E0038328 PULLEY,GATES POLY 8MX-45S-36	E0038985 PULLEY,GATES POLY 8MX-63S-36
		1135528	1135526	BRAKE	1135127	1135125			
135	1 1/2	1135531	1135529		1135278	1135197	SK572.1Z-VL-90 SP4	E0038328 PULLEY,GATES POLY 8MX-45S-36	E0038328 PULLEY,GATES POLY 8MX-45S-36
		1135532	1135530	BRAKE	1135279	1135277			
	3	1135537	1135533		1135288	1135286	SK573.1Z-VL-100 LP4	E0033834 PULLEY,GATES POLY 8MX-48S-36	E0038985 PULLEY,GATES 8MX-63S-36
		1135538	1135534	BRAKE	1135289	1135287			
150	1 1/2	1135541	1135539		1135302	1135300	SK572.1Z-VL-90 SP4	E0038328 PULLEY,GATES POLY 8MX-45S-36	E0038328 PULLEY,GATES POLY 8MX-45S-36
		1135542	1135540	BRAKE	1135305	1135301			
	3	1135545	1135543		1135310	1135307	SK573.1Z-VL-100 LP4	E0033834 PULLEY,GATES POLY 8MX-48S-36	E0038985 PULLEY,GATES 8MX-63S-36
		1135546	1135544	BRAKE	1135313	1135309			
180	1 1/2	1135566	1135564		1135334	1135332	SK572.1Z-VL-90 SP4	E0033834 PULLEY,GATES POLY 8MX-48S-36	E0033835 PULLEY,GATES 8MX-45S-36
		1135567	1135565	BRAKE	1135335	1135333			
	3	1135570	1135568		1135152	1135148	SK572.1Z-VL-100 LP4	E0033835 PULLEY,GATES POLY 8MX-50S-36	E0038985 PULLEY,GATES 8MX-63S-36
		1135571	1135569	BRAKE	1135153	1135150			
210	2	1135574	1135572		1135345	1135342	SK572.1Z-VL-90 LP4	E0038328 PULLEY,GATES POLY 8MX-45S-36	E0033835 PULLEY,GATES POLY 8MX-50S-36
		1135575	1135573	BRAKE	1135346	1135343			
	5	1135580	1135578		1135350	1135348	SK572.1Z-VL-112 MP4	E0038328 PULLEY,GATES POLY 8MX-45S-36	E0038985 PULLEY,GATES POLY 8MX-63S-36
		1135581	1135579	BRAKE	1135351	1135349			
240	2	1135584	1135582		1135357	1135355	SK572.1Z-VL-90 LP4	E0038328 PULLEY,GATES POLY 8MX-45S-36	E0038328 PULLEY,GATES POLY 8MX-45S-36
		1135585	1135583	BRAKE	1135358	1135356			
	5	1135600	1135598		1135362	1135359	SK572.1Z-VL-112 MP4	E0038978 PULLEY,GATES POLY 8MX-53S-36	E0038309 PULLEY,GATES 8MX-60S-36
		1135601	1135599	BRAKE	1135363	1135360			
280	2	1135604	1135602		1135367	1135364	SK572.1Z-VL-90 LP4	E0033834 PULLEY,GATES POLY 8MX-48S-36	E0033835 PULLEY,GATES 8MX-50S-36
		1135605	1135603	BRAKE	1135368	1135366			
	5	1135608	1135606		1135362	1135359	SK572.1Z-VL-112 MP4	E0038988 PULLEY,GATES 8MX-56S-36	E0038309 PULLEY,GATES 8MX-60S-36
		1135609	1135607	BRAKE	1135363	1135360			
300	2	1135612	1135610		1135372	1135369	SK572.1Z-VL-90 LP4	E0038988 PULLEY,GATES 8MX-56S-36	E0038309 PULLEY,GATES 8MX-60S-36
		1135619	1135611	BRAKE	1135373	1135370			
	5	1135622	1135620		1135378	1135374	SK572.1Z-VL-112 MP4	E0033835 PULLEY,GATES POLY 8MX-50S-36	E0038985 PULLEY,GATES 8MX-63S-36
		1135623	1135621	BRAKE	1135379	1135375			
Drive-Train Ref Dwg # 21S012 H									

11.6.3 CRUZbelt Mount plate

MOUNT PLATE FOR CONVERTING OLD STYLE GEARMOTOR MOUNT TO THE NEW NORD .1 NEW STYLE MOUNTING					
BALLOON	**DESCRIPTION**	**Widths & Part #s**			
		16" BF	**22" BF**	**28" BF**	**34" BF**
6	PL,MTR CZB CDR SK57_.1 W/ 3/8-16 PEM NUTS	1167735			
6	PL,MTR CZB CDR SK37_.1, W/ 3/8-16 PEM NUTS	1186161			
		Reference Dwg. #21S012H, 21D634, 21D672			

11.7 CRUZbelt End Drive

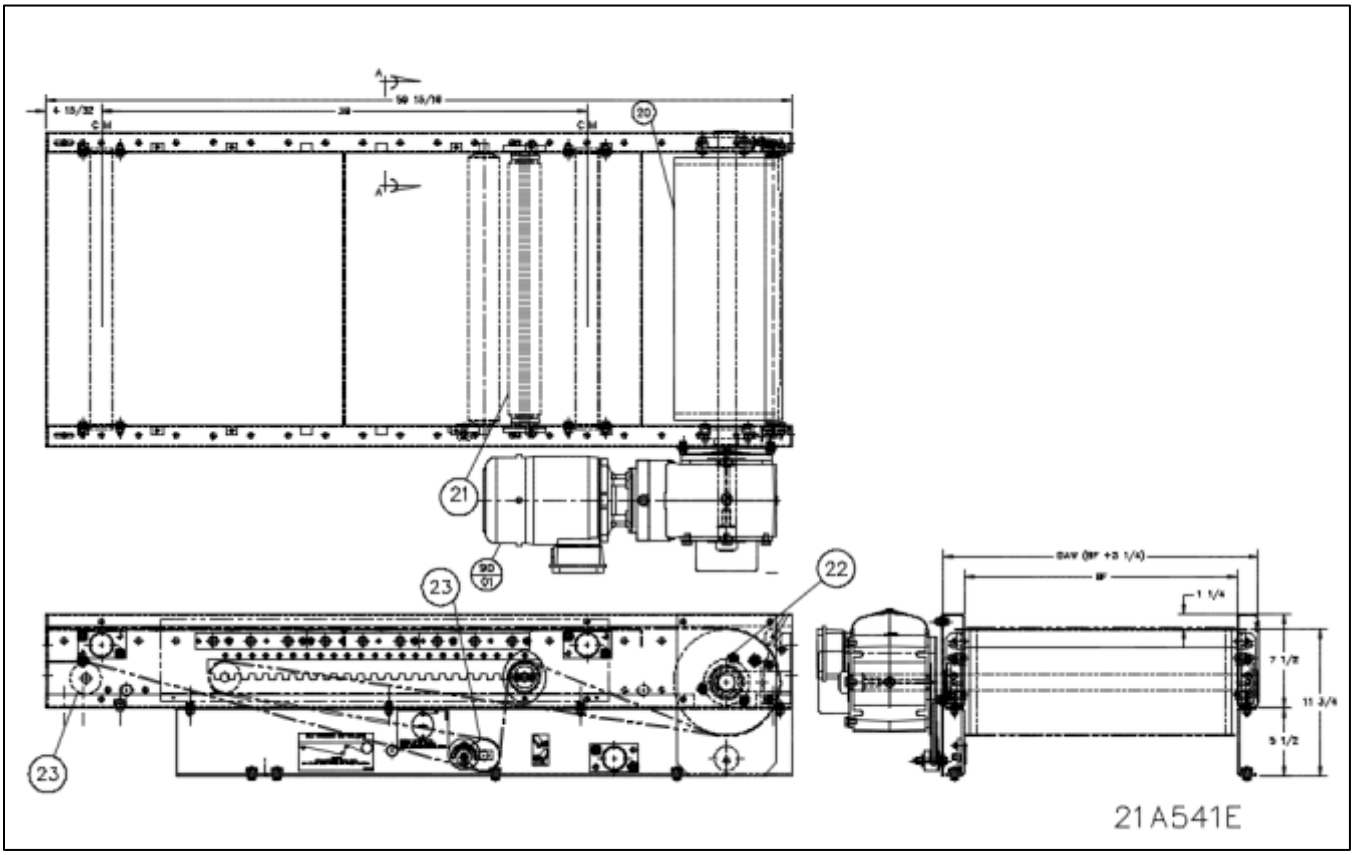

11.7.1 CRUZbelt End Drive & Drive Train Replacement Parts

REPLACEMENT PARTS FOR CRUZBELT END DRIVE							
BALLOON	**DESCRIPTION**	**Widths & Part #s**					
		16" BF	**22" BF**	**28" BF**	**34" BF**	**40" BF**	**46" BF**
20	PULLEY,WLDMT _ _CZB 8"EDR TAP	E0009080	E0009081	E0009082	E0009083	E0009084	E0009085
21	PULLEY,_ _CZB DR 2.5 DIA 1/4W DRIVE TAKE-UP ROLLER	E0040400	E0040401	E0040402	E0040403	E0040404	E0040405
22	BRG,3BOLT FLG X 1-3/8" SST	1115245					
23	PULLEY,_ _4CZB 2.5 DIA 1/4W	E0040390	E0040391	E0040392	E0040393	E0040394	E0040395
Bed Reference Dwg. #21A541E							

11.7.2 CRUZbelt Drive Train ITEM # Replacement Parts

DRIVE TRAIN ITEM #s				
DRIVE TRAIN ITEM #s / GEARMOTOR PART #s FOR CRUZBELT END DRIVES				
		BALLON	90	90
SPEED	HP	BELT PULL	RH DRIVE TRAIN	LH DRIVE TRAIN
75	1	404	1171281	1171294
90	1.5	469	1171282	1171295
105	1.5	418	1171283	1171296
120	1.5	380	1171284	1171297
135	2	455	1171285	1171298
150	2	414	1171286	1171299
210	3	444	1171287	1171300
				Dwg # 21A541E

11.8 CRUZbelt Intermediate Slider Bed

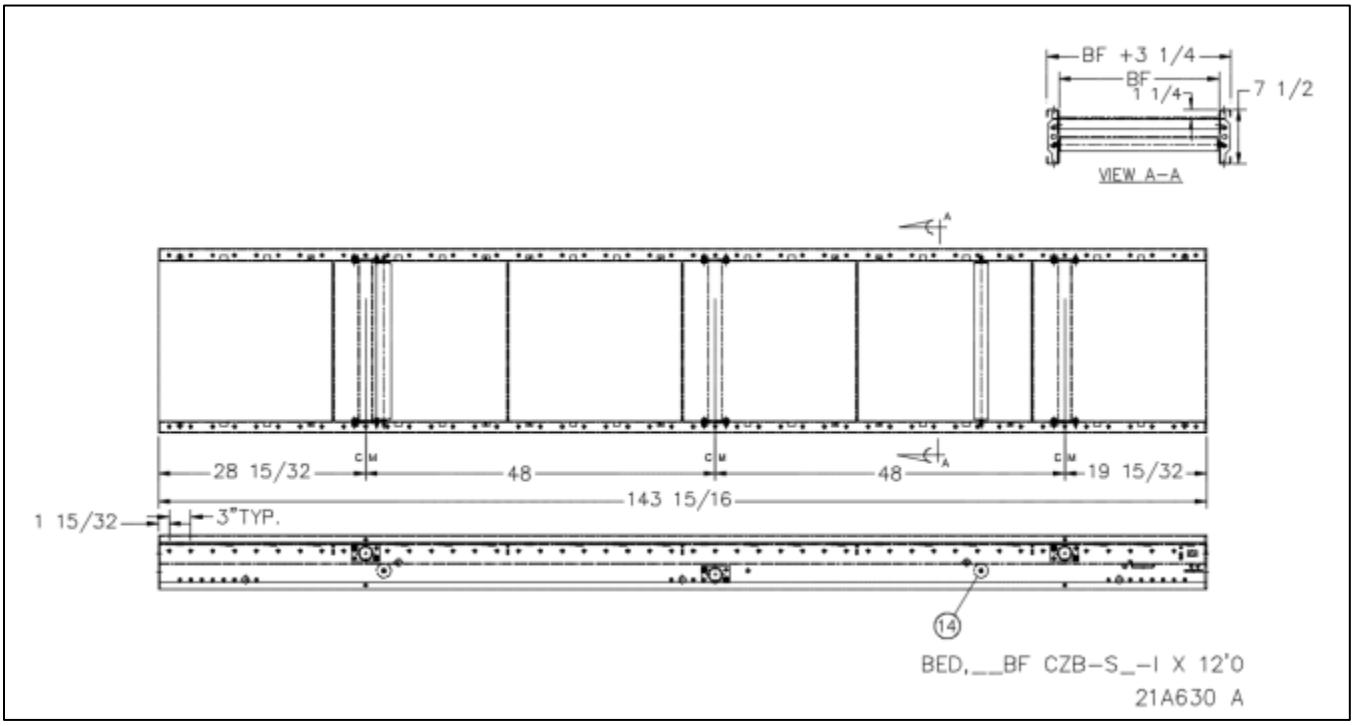

11.8.1 CRUZbelt Intermediate Slider Bed

REPLACEMENT PARTS FOR CRUZBELT INTERMEDIATE SLIDER BED							
		Widths & Part #s					
BALLOON	**DESCRIPTION**	**16" BF**	**22" BF**	**28" BF**	**34" BF**	**40" BF**	**46" BF**
14	ROLLER,_ _CZB 1.9 SNUBBER PRBG	E0009652	E0009653	E0009654	E0009655	E0009656	E0009657
							Bed Reference Dwg. #21A630A

11.9 CRUZbelt Slider End Bed

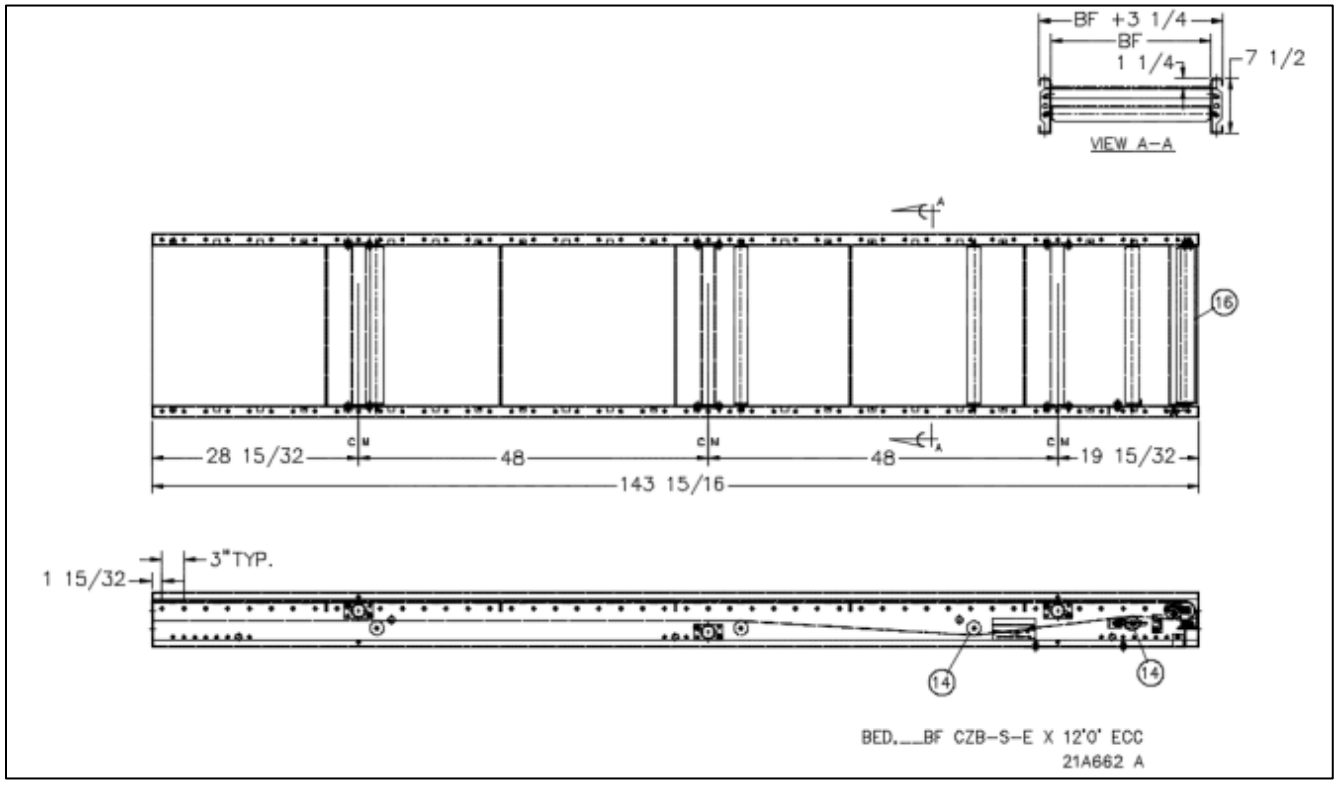

11.9.1 CRUZbelt Slider End Bed

REPLACEMENT PARTS FOR CRUZBELT SLIDER END BED							
		Widths & Part #s					
		Carton Tote Conveyor & Empty Carton				Empty Carton Only	
BALLOON	**DESCRIPTION**	**16" BF**	**22" BF**	**28" BF**	**34" BF**	**40" BF**	**46" BF**
14	ROLLER,_ _CZB 1.9 SNUBBER PRBG	E0009652	E0009653	E0009654	E0009655	E0009656	E0009657
16	PULLEY,_ _CZB 2.5 DIA 1/4W	E0040390	E0040391	E0040392	E0040393	E0040394	E0040395
Bed Reference Dwg. #21A662A							

11.10 CRUZbelt Slider Center Drive

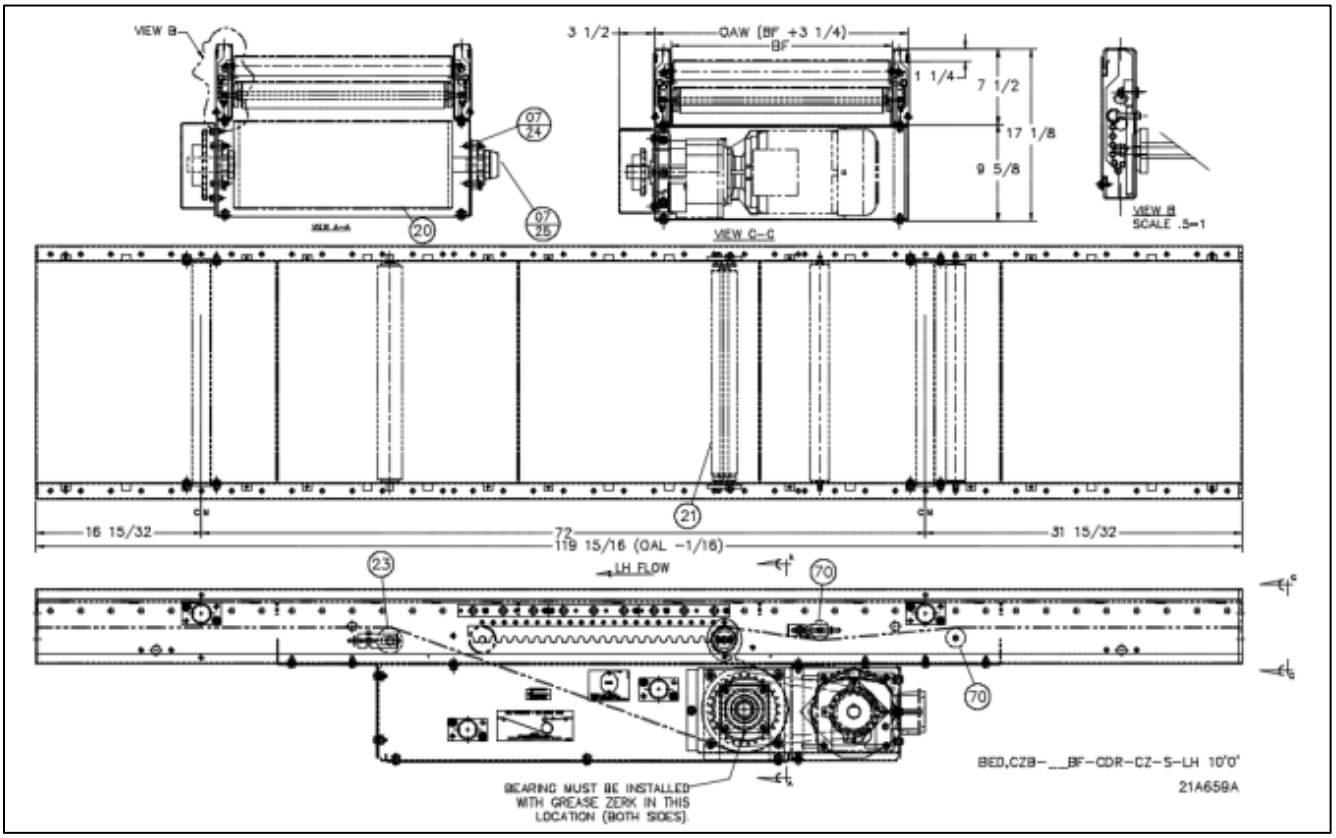

11.10.1 CRUZbelt Slider Center drive

REPLACEMENT PARTS FOR CRUZbelt SLIDER CENTER DRIVE							
		Widths & Part #s					
		Carton Tote Conveyor & Empty Carton				Empty Carton Only	
BALLOON	**DESCRIPTION**	**16" BF**	**22" BF**	**28" BF**	**34" BF**	**40" BF**	**46" BF**
07/24	BRG, FLG 4BOLT X 1-7/16"	1114091					
07/25	BEARING END SAFTY CAP	1114092					
20	PULLEY, WLDMT 8" _ _BF CZB CDR	1158680	1158681	1158682	1158683	1161079	1161080
21	PULLEY, _ _CZB DR 2.5 DIA 1/4W	E0040400	E0040401	E0040402	E0040403	E0040404	E0040405
23	ROLLER, SNUB _ _BF 11/16 AXLE	18218001	18224001	18230001	18236001	18242001	18248001
70	ROLLER, _ _CZB 1.9 SNUBBER PRBG	E0009652	E0009653	E0009654	E0009655	E0009656	E0009657
							Bed Reference Dwg. #21A659A

11.11 CRUZbelt Intermediate Noseunder Bed

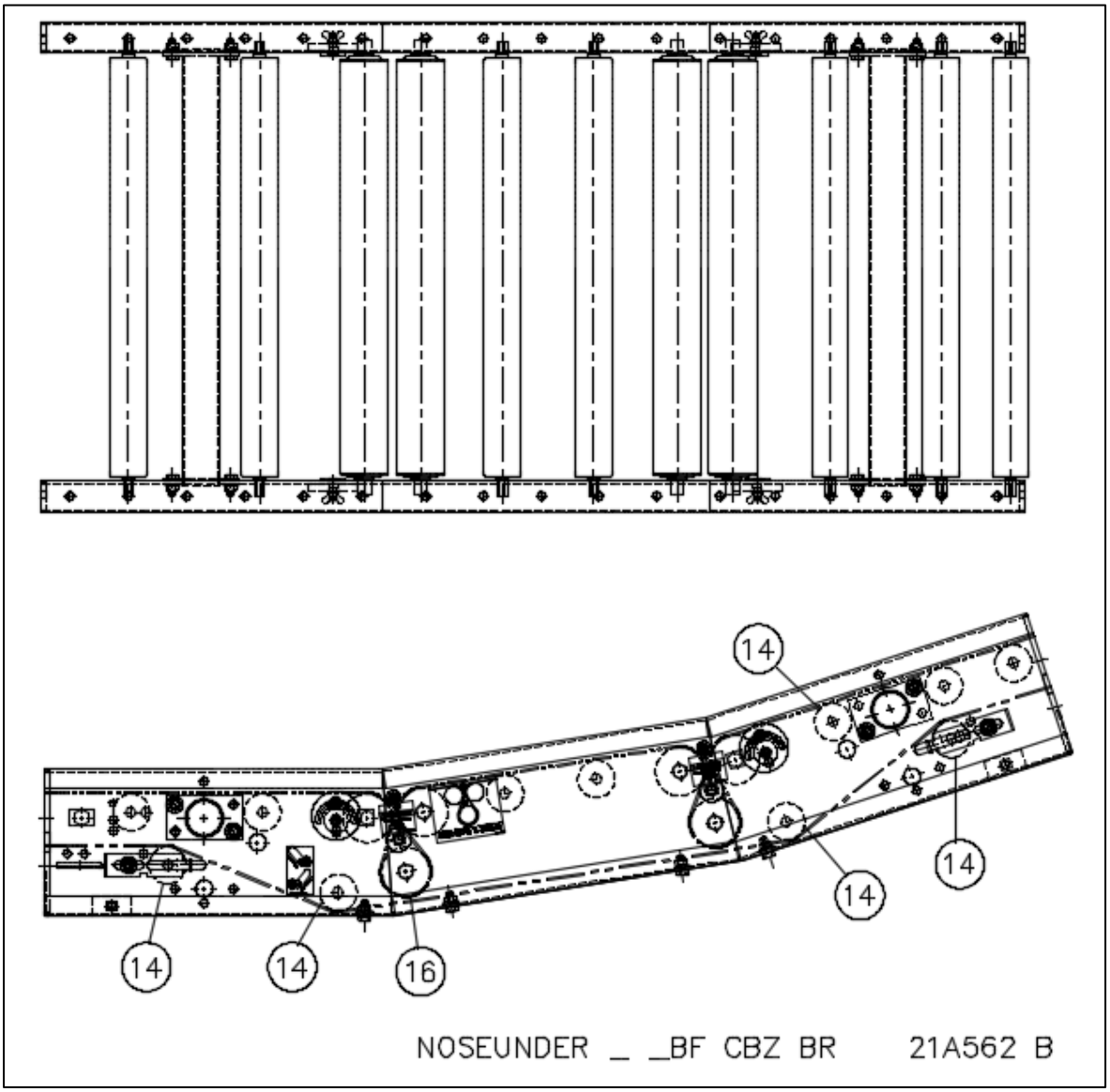

11.11.1 CRUZbelt Noseunder

REPLACEMENTS FOR CRUZBELT NOSEUNDER					
BALLOON	DESCRIPTION	Widths & Part #s			
		16" BF	22" BF	28" BF	34" BF
14	ROLLER, _ _CZB 1.9 SNUBBER PRBG	E0009652	E0009653	E0009654	E0009655
16	PULLEY,_ _CZB 2.5 DIA 1/4W	E0040390	E0040391	E0040392	E0040393
Note: #14 above is not used with slider pan conveyors					
					Bed Reference Dwg. #21A562B

11.12 CRUZbelt Noseunder End Bed

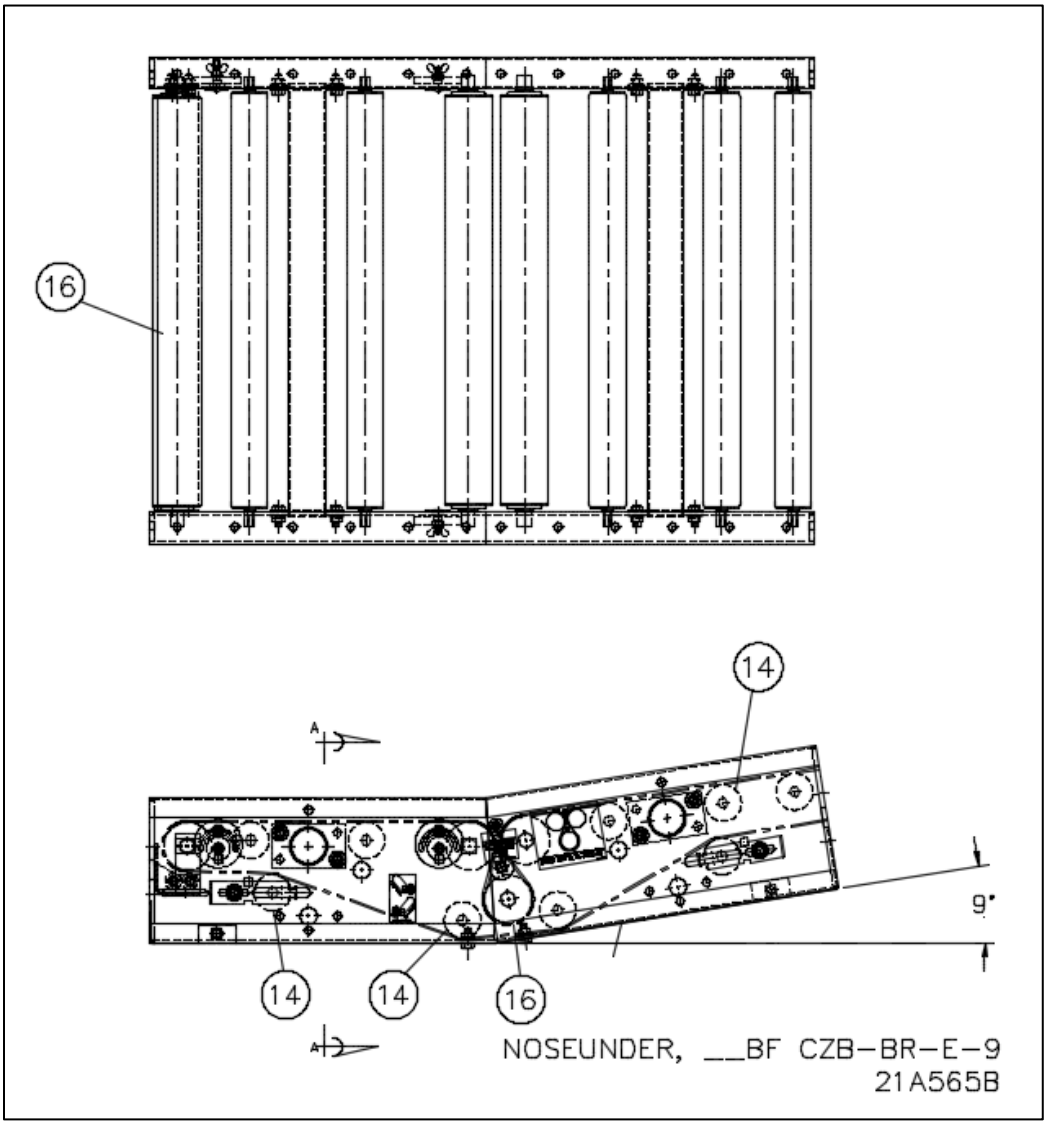

11.12.1 CRUZbelt Noseunder End Bed

REPLACEMENT PART FOR CRUZBELT NOSEUNDER END BED					
		Widths & Part #s			
BALLOON	**DESCRIPTION**	**16" BF**	**22" BF**	**28" BF**	**34" BF**
14	ROLLER,_ _CZB 1.9 SNUBBER PRBG	E0009652	E0009653	E0009654	E0009655
16	PULLEY,_ _CZB 2.5 DIA 1/4W	E0040390	E0040391	E0040392	E0040393
					Bed Reference Dwg. #21A565B

11.13 CRUZbelt Intermediate Noseover Bed

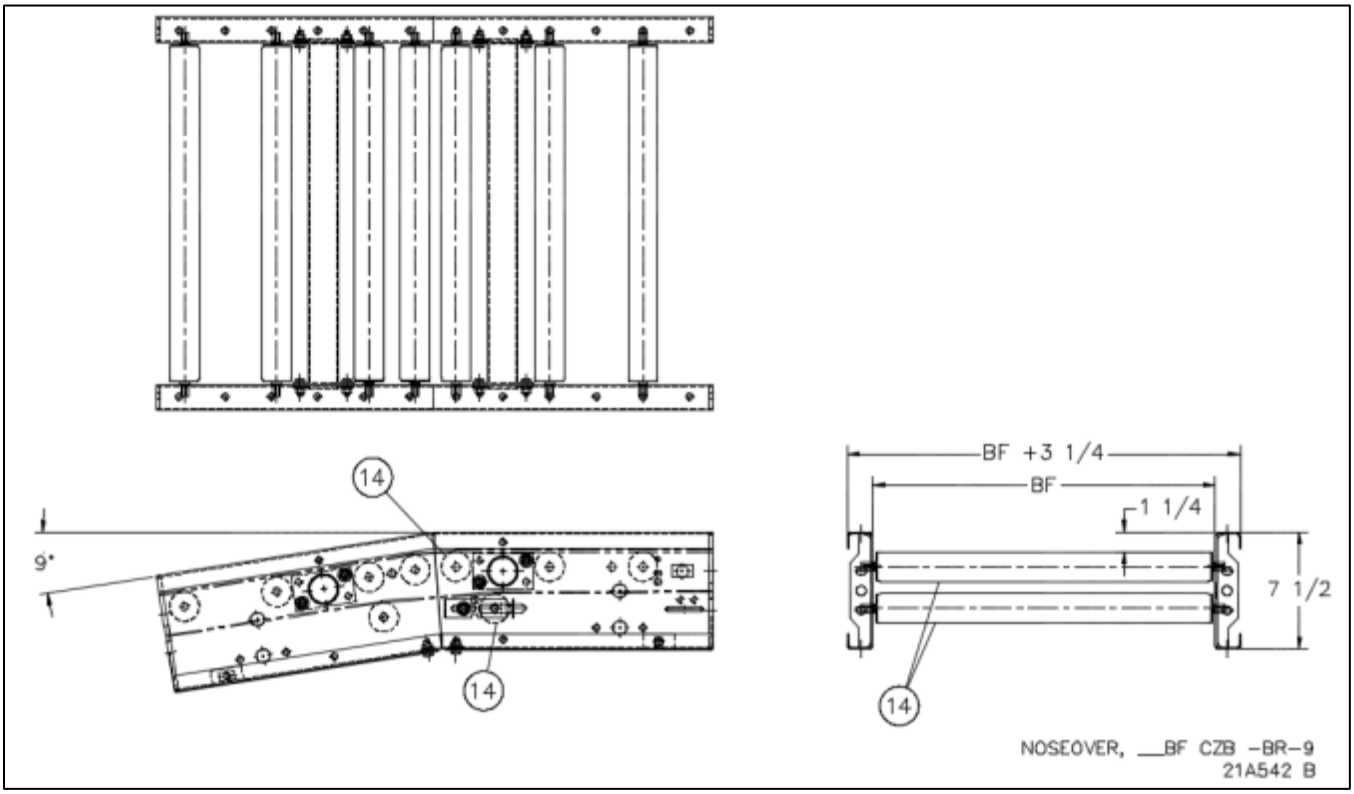

11.13.1 CRUZbelt Intermediate Noseover Bed

REPLACEMENT PARTS FOR CRUZBELT INTERMEDIATE NOSEOVER BED					
		Widths & Part #s			
BALLOON	**DESCRIPTION**	**16" BF**	**22" BF**	**28" BF**	**34" BF**
14	ROLLER,_ _CZB 1.9 SNUBBER PRBG	E0009652	E0009653	E0009654	E0009655
Bed Reference Dwg. #21A542B					

11.14 CRUZbelt Noseover End Bed

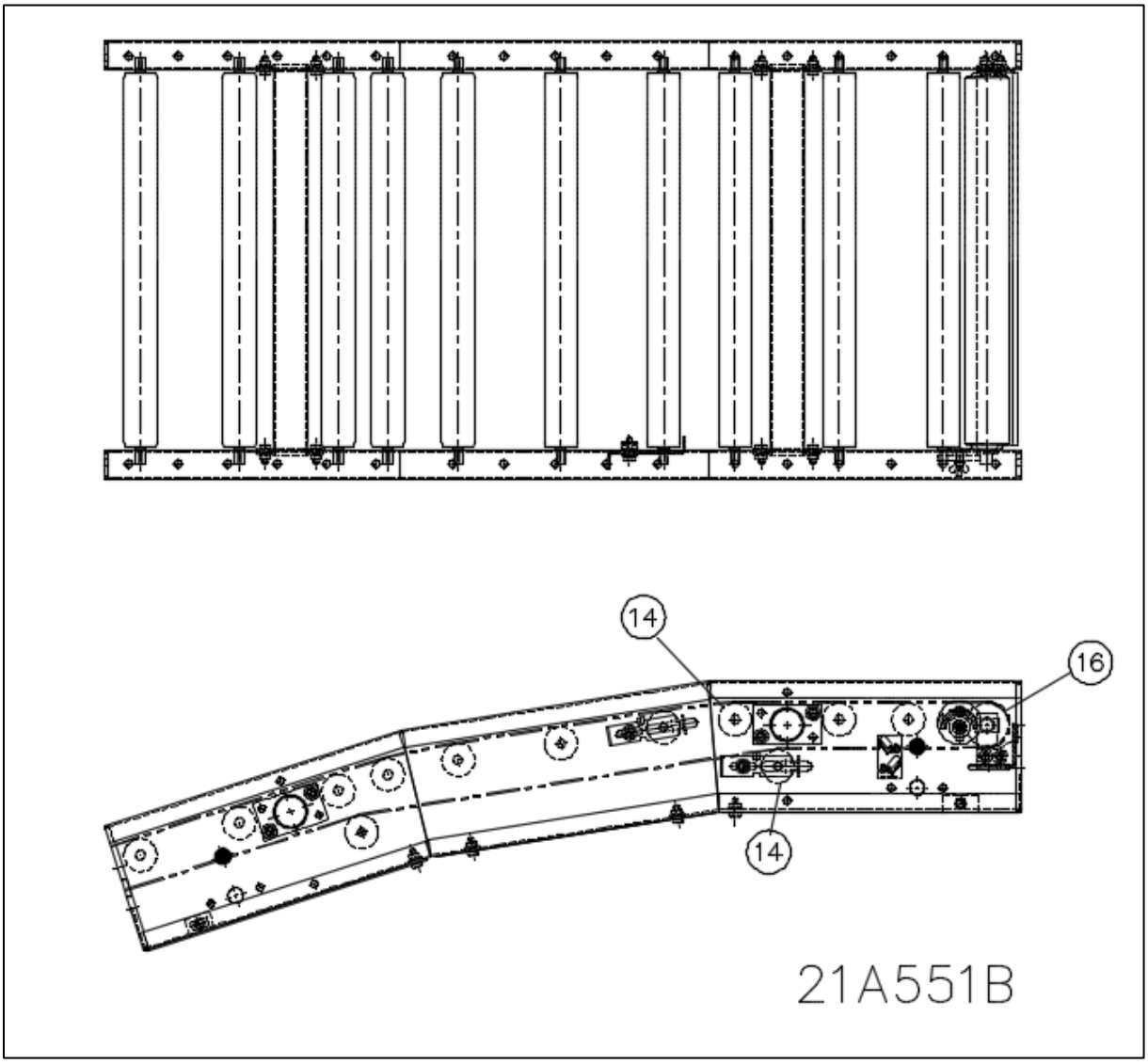

11.14.1 CRUZbelt Noseover End Bed

REPLACEMENT PART FOR CRUZBELT NOSEOVER END BED					
		Widths & Part #s			
BALLOON	**DESCRIPTION**	**16" BF**	**22" BF**	**28" BF**	**34" BF**
14	ROLLER,_ _CZB 1.9 SNUBBER PRBG	E0009652	E0009653	E0009654	E0009655
16	PULLEY,_ _CZB 2.5 DIA 1/4W	E0040390	E0040391	E0040392	E0040393
					Bed Reference Dwg. #21A551B

11.15 CRUZbelt Empty Carton Slider Noseover

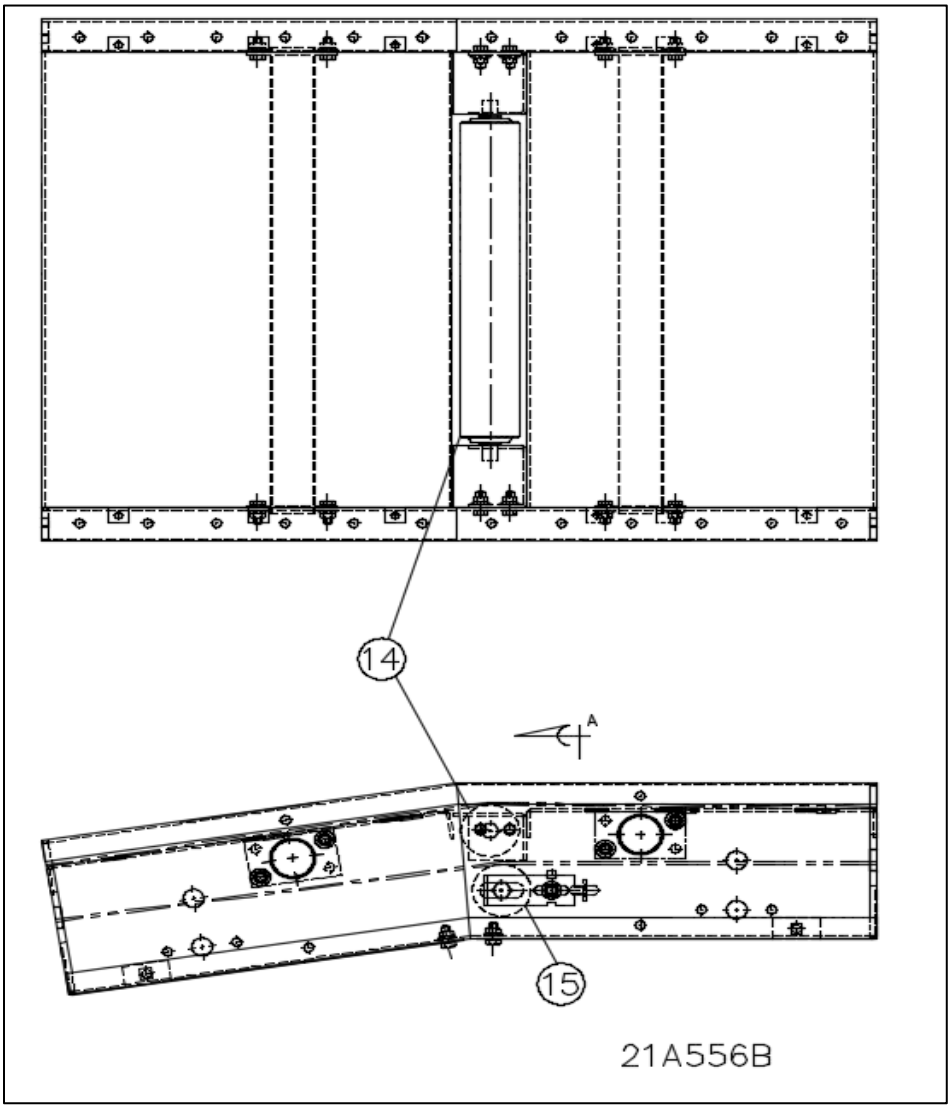

11.15.1 CRUZbelt Slider Noseover

REPLACEMENT PARTS FOR CRUZBELT SLIDER NOSEOVER							
		Widths & Part #s					
BALLOON	DESCRIPTION	16" BF	22" BF	28" BF	34" BF	40" BF	46" BF
14	PULLEY,_ _CZB 2.5 DIA 1/4W	1157669	E0040390	E0040391	E0040392	E0040393	E0040394
15	PULLEY,_ _CZB 2.5 DIA 1/4W	E0040390	E0040391	E0040392	E0040393	E0040394	E0040395
							Bed Reference Dwg. #21A556B

11.16 CRUZbelt Empty Carton Conveyor (Slider) Double Snubber

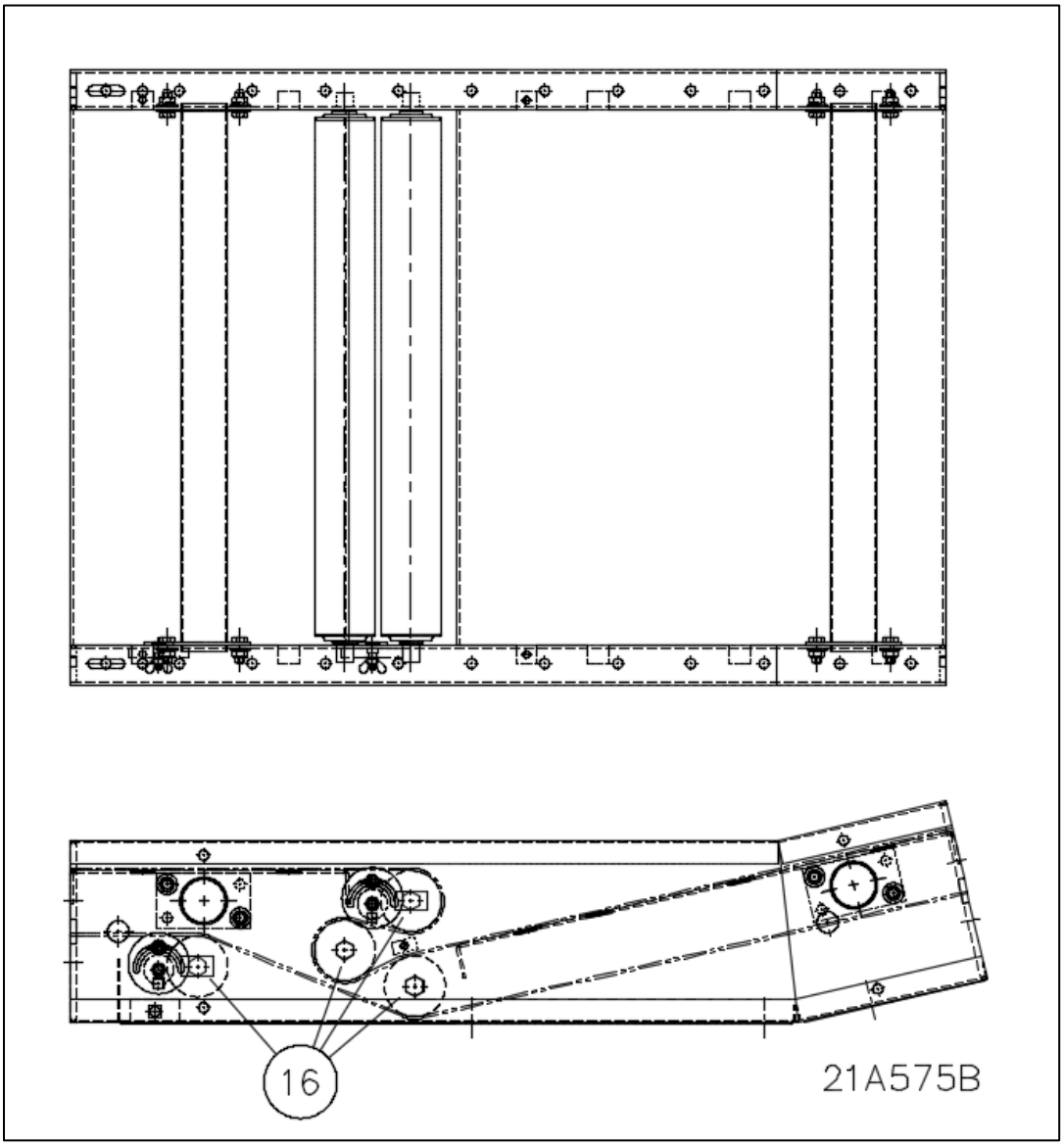

11.16.1 CRUZbelt Double Snubber (ECC Only)

REPLACEMENT PARTS FOR CRUZBELT DOUBLE SNUBBER (ECC Only)							
		Widths & Part #s					
BALLOON	DESCRIPTION	16" BF	22" BF	28" BF	34" BF	40" BF	46" BF
16	PULLEY,_ _CZB 2.5 DIA 1/4W	E0040390	E0040391	E0040392	E0040393	E0040394	E0040395
							Bed Reference Dwg. #21A575B

11.17 CRUZbelt 4 Brake Meter & Induction Bed

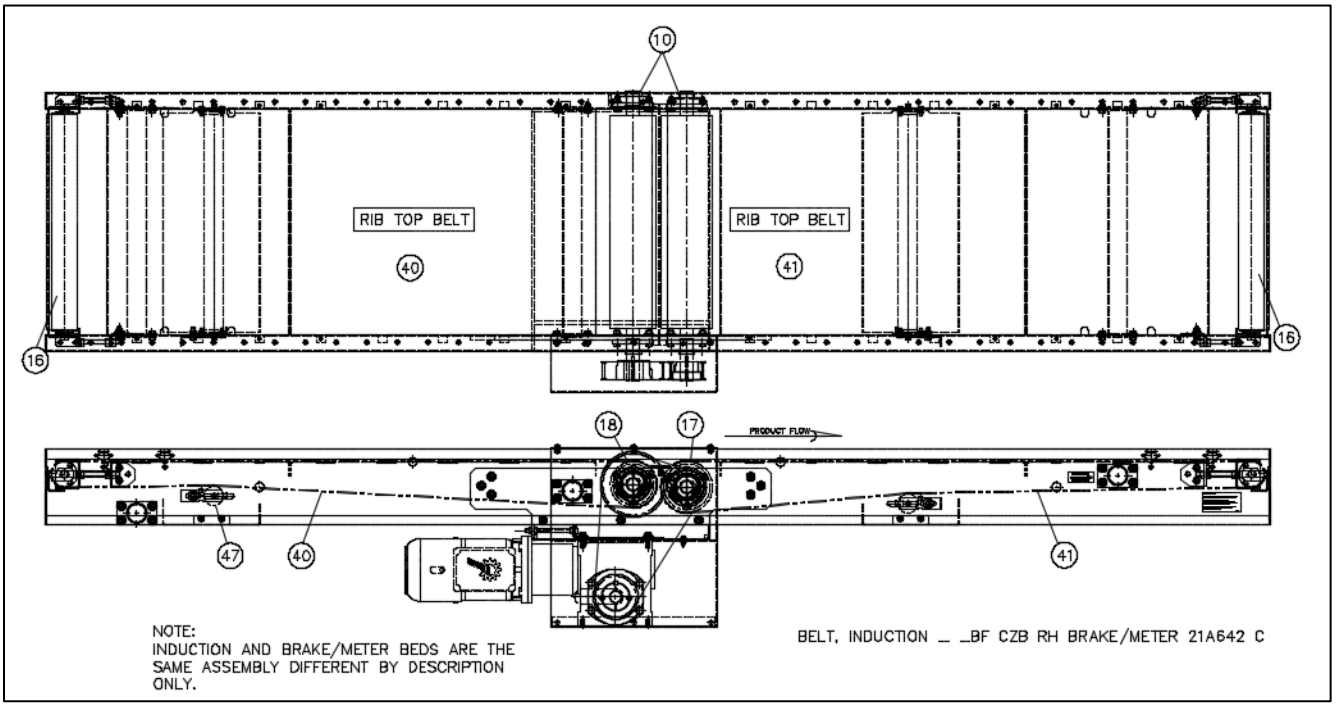

11.17.1 CRUZbelt 4 Brake Meter Induction Beds

REPLACEMENT PARTS FOR CRUZBELT 4 BRAKE METER & INDUCTION BEDS					
		Widths & Part #s			
BALLOON	**DESCRIPTION**	**16" BF**	**22" BF**	**28" BF**	**34" BF**
10	BRG,FLG 3BOLT X 1-1/4" BORE DODGE	1107696			
16	PULLEY,_ _CZB 2.5 DIA 1/4W	E0040390	E0040391	E0040392	E0040393
17	PULLEY,TAPERLOCK _ _CZB 4.5DIA, LAGGED, 80A URETHANE	E0038269	E0038270	E0038271	E0038272
18	PULLEY,TAPERLOCK _ _CZB 4" DIA, LAGGED, 80A URETHANE	E0038273	E0038274	E0038275	E0038276
40 & 41	BELT,CZB 15-9/16X10'2"INC, BP290QW LACED W/CERT	1169943	1169944	1169945	1169946
47	ROLLER, _ _CZB 1.9 SNUBBER PRBG	E0009652	E0009653	E0009654	E0009655
					Bed Reference Dwg. #21A642C

11.18 CRUZbelt Brake Meter & Induction Bed Drive-Train

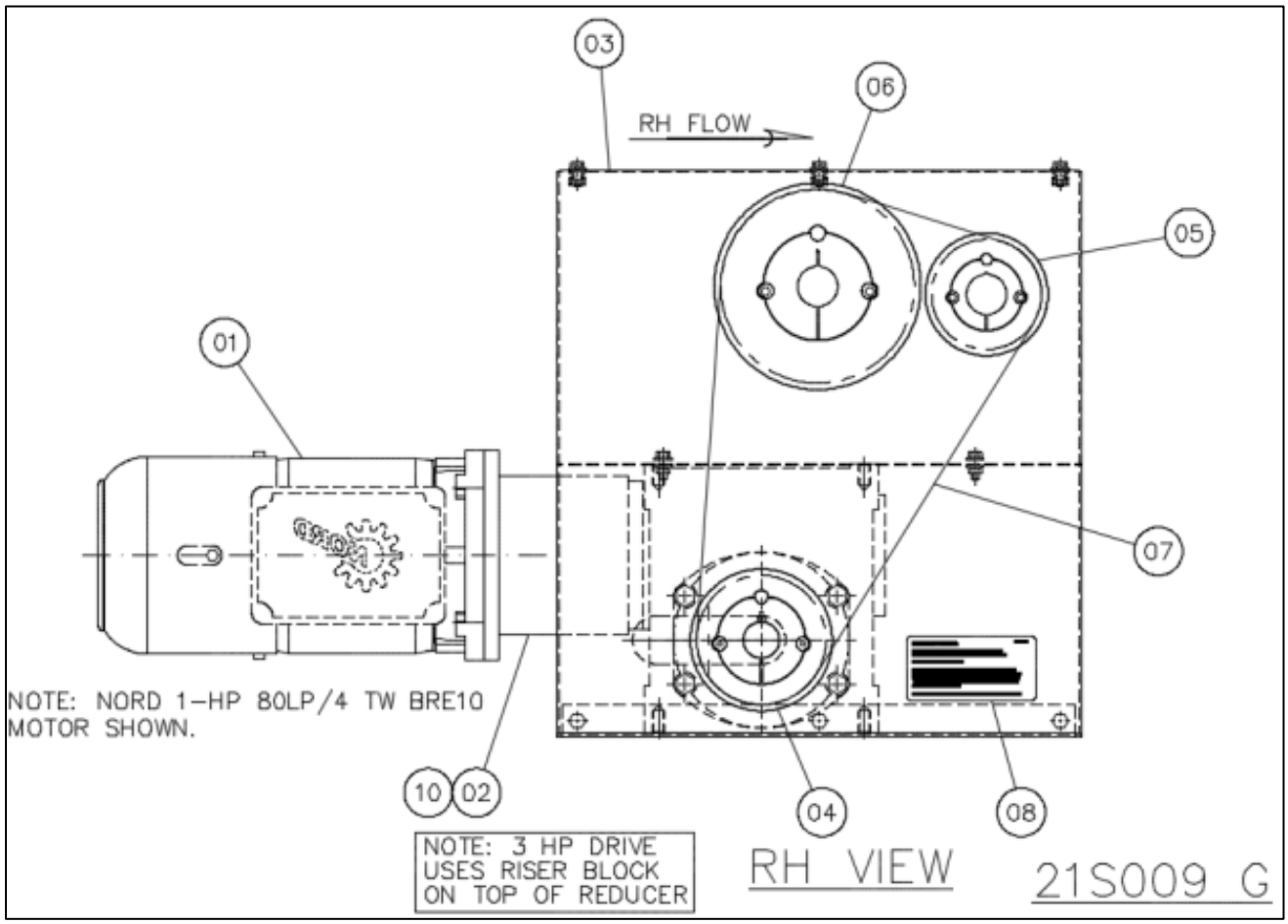

11.18.1 CRUZbelt Induction Bed 2:1 Reduction Drive-Train

REPLACEMENT PARTS FOR CRUZBELT INDUCT, DRIVE TRAIN (2:1 REDUCTION DRIVE TRAINS) RIGHT HAND

			Balloon#	1	2	4		5		6		7	10
NOMINAL FPM	HP	OPTIONS	DRIVE TRAIN	GEAR MOTOR	REDUCER	DRIVE PULLY	BUSHING	DRIVEN PULLY	BUSHING	DRIVEN PULLY	BUSHING	BELT	HYTREL SPYDER
45/90	1	BRAKE	1190163	1190117	E0038363	E0038310 34-TOOTH	90800943	E0038310 34-TOOTH	90800948	E0038309 60-TOOTH	E0038311	E0034960	E0038360
	2	LESS 24V POWER SUPPLY	E0038345 230V	E0038358									
			E0038304 460V	E0038329									
		WITH 24V POWER SUPPLY	1130006 230V	E0038358									
			1130027 460V	E0038329									
60/120	1	BRAKE	1190165	1190117	E0038363	E0038328 45-TOOTH	E0038372	E0038310 34-TOOTH	90800948	E0038309 60-TOOTH	E0038311	E0034960	E0038360
	2	LESS 24V POWER SUPPLY	E0038346 230V	E0038358									
			E0038305 460V	E0038329									
		WITH 24V POWER SUPPLY	1130007 230V	E0038358									
			1130028 460V	E0038329									
75/150	1	BRAKE	1190167	1190117	E0038331	E0038310 34-TOOTH	90800943	E0038310 34-TOOTH	90800948	E0038309 60-TOOTH	E0038311	E0034960	E0038360
	2	LESS 24V POWER SUPPLY	E0038347 230V	E0038358									
			E0038306 460V	E0038329									
		WITH 24V POWER SUPPLY	1130008 230V	E0038358									
			1130029 460V	E0038329									
	3	VFD READY	1190187	1190159	E0038365								E0038361
100/200	1	BRAKE	1190169	1190117	E0038331	E0038328 45-TOOTH	E0038372	E0038310 34-TOOTH	90800948	E0038309 60-TOOTH	E0038311	E0034960	E0038360
	2	LESS 24V POWER SUPPLY	E0038348 230V	E0038358									
			E0038307 460V	E0038329									
		WITH 24V POWER SUPPLY	1130009 230V	E0038358									
			1130030 460V	E0038329									
	3	VFD READY	1190188	1190159	E0038365								E0038361
120/240	1	BRAKE	1190170	1190117	E0038331	E0033833 36-TOOTH	90800943	E0038310 34-TOOTH	90800948	E0038309 60-TOOTH	E0038311	E0034960	E0038360
	2	LESS 24V POWER SUPPLY	E0038349 230V	E0038358									
			E0038308 460V	E0038329									
		WITH 24V POWER SUPPLY	1130010 230V	E0038358									
			1130031 460V	E0038329									
	3	VFD READY	1190191	1190159	E0038368								E0038361

Drive-Train Reference Dwg #21S009

REPLACEMENT PARTS FOR CRUZBELT INDUCT, DRIVE TRAIN (2:1 REDUCTION DRIVE TRAINS) LEFT HAND

			Balloon#	1	2	4		5		6		7	10
NOMINAL FPM	HP	OPTIONS	DRIVE TRAIN	GEAR MOTOR	REDUCER	DRIVE PULLY	BUSHING	DRIVEN PULLY	BUSHING	DRIVEN PULLY	BUSHING	BELT	HYTREL SPYDER
45/90	1	BRAKE	1190177	1190114	E0038363	E0038310 34-TOOTH	90800943	E0038310 34-TOOTH	90800948	E0038309 60-TOOTH	E0038311	E0034960	E0038360
	2	LESS 24V POWER SUPPLY	E0038423 230V	E0038358									
			E0038445 460V	E0038329									
		WITH 24V POWER SUPPLY	1130017 230V	E0038358									
			1130039 460V	E0038329									
60/120	1	BRAKE	1190178	1190114	E0038363	E0038328 45-TOOTH	E0038372	E0038310 34-TOOTH	90800948	E0038309 60-TOOTH	E0038311	E0034960	E0038360
	2	LESS 24V POWER SUPPLY	E0038424 230V	E0038358									
			E0038446 460V	E0038329									
		WITH 24V POWER SUPPLY	1130018 230V	E0038358									
			1130040 460V	E0038329									
75/150	1	BRAKE	1190179	1190114	E0038331	E0038310 34-TOOTH	90800943	E0038310 34-TOOTH	90800948	E0038309 60-TOOTH	E0038311	E0034960	E0038360
	2	LESS 24V POWER SUPPLY	E0038425 230V	E0038358									
			E0038447 460V	E0038329									
		WITH 24V POWER SUPPLY	1130019 230V	E0038358									
			1130041 460V	E0038329									
	3	VFD READY	1190195	1190159	E0038365								E0038361
100/200	1	BRAKE	1190180	1190114	E0038331	E0038328 45-TOOTH	E0038372	E0038310 34-TOOTH	90800948	E0038309 60-TOOTH	E0038311	E0034960	E0038360
	2	LESS 24V POWER SUPPLY	E0038426 230V	E0038358									
			E0038448 460V	E0038329									
		WITH 24V POWER SUPPLY	1130020 230V	E0038358									
			1130042 460V	E0038329									
	3	VFD READY	1190197	1190159	E0038365								E0038361
120/240	1	BRAKE	1190181	1190114	E0038331	E0033833 36-TOOTH	90800943	E0038310 34-TOOTH	90800948	E0038309 60-TOOTH	E0038311	E0034960	E0038360
	2	LESS 24V POWER SUPPLY	E0038427 230V	E0038358									
			E0038449 460V	E0038329									
		WITH 24V POWER SUPPLY	1130021 230V	E0038358									
			1130043 460V	E0038329									
	3	VFD READY	1190198	1190159	E0038368								E0038361

Drive-Train Reference Dwg #21S009

11.18.2 CRUZbelt Induction Bed 1.5:1 Reduction Drive-Train

REPLACEMENT PARTS FOR CRUZBELT INDUCT, DRIVE TRAIN (1.5:1 REDUCTION DRIVE TRAINS) RIGHT HAND

			Balloon#	1	2	4		5		6		7	10
NOMINAL FPM	HP	OPTIONS	DRIVE TRAIN	GEAR MOTOR	REDUCER	DRIVE PULLY	BUSHING	DRIVEN PULLY	BUSHING	DRIVEN PULLY	BUSHING	BELT	HYTREL SPYDER
60/90	1	BRAKE	1190171	1190117	E0038363	E0034695 38-TOOTH	90800943	E0034695 38-TOOTH	90800948	E0033835 50-TOOTH	E0034696	E0034960	E0038360
	2	LESS 24V POWER SUPPLY	E0038350 230V	E0038358									
			E0038313 460V	E0038329									
		WITH 24V POWER SUPPLY	1130011 230V	E0038358									
			1130032 460V	E0038329									
80/120	1	BRAKE	1190172	1190117	E0038363	E0038328 45-TOOTH	E0038372	E0038310 34-TOOTH	90800948	E0038328 45-TOOTH	E0034696	E0034960	E0038360
	2	LESS 24V POWER SUPPLY	E0038351 230V	E0038358									
			E0038314 460V	E0038329									
		WITH 24V POWER SUPPLY	1130012 230V	E0038358									
			1130033 460V	E0038329									
100/150	1	BRAKE	1190173	1190117	E0038331	E0034695 38-TOOTH	90800943	E0034695 38-TOOTH	90800948	E0033835 50-TOOTH	E0034696	E0034960	E0038360
	2	LESS 24V POWER SUPPLY	E0038352 230V	E0038358									
			E0038315 460V	E0038329									
		WITH 24V POWER SUPPLY	1130013 230V	E0038358									
			1130034 460V	E0038329									
	3	VFD READY	1190192	1190159	E0038365								E003E361
133/200	1	BRAKE	1190174	1190117	E0038331	E0038328 45-TOOTH	90800943	E0038310 34-TOOTH	90800948	E0038328 45-TOOTH	E0034696	E0034960	E0038360
	2	LESS 24V POWER SUPPLY	E0038353 230V	E0038358									
			E0038316 460V	E0038329									
		WITH 24V POWER SUPPLY	1130014 230V	E0038358									
			1130035 460V	E0038329									
	3	VFD READY	1190193	1190159	E0038365								E0038361
160/240	1	BRAKE	1190175	1190117	E0038331	E0034695 38-TOOTH	90800943	E0033833 36-TOOTH	90800948	E0033834 48-TOOTH	E0034696	E0034960	E0038360
	2	LESS 24V POWER SUPPLY	E0038354 230V	E0038358									
			E0038317 460V	E0038329									
		WITH 24V POWER SUPPLY	1130015 230V	E0038358									
			1130036 460V	E0038329									
	3	VFD READY	1190194	1190159	E0038368								E0038361

Drive-Train Reference Dwg #21S009

REPLACEMENT PARTS FOR CRUZBELT INDUCT, DRIVE TRAIN (1.5:1 REDUCTION DRIVE TRAINS) LEFT HAND

			Balloon#	1	2	4		5		6		7	10
NOMINAL FPM	HP	OPTIONS	DRIVE TRAIN	GEAR MOTOR	REDUCER	DRIVE PULLY	BUSHING	DRIVEN PULLY	BUSHING	DRIVEN PULLY	BUSHING	BELT	HYTREL SPYDER
60/90	1	BRAKE	1190182	1190114	E0038363	E0034695 38-TOOTH	90800943	E0034695 38-TOOTH	90800948	E0033835 50-TOOTH	E0034696	E0034960	E0038360
	2	LESS 24V POWER SUPPLY	E0038428 230V	E0038358									
			E0038450 460V	E0038329									
		WITH 24V POWER SUPPLY	1130022 230V	E0038358									
			1130044 460V	E0038329									
80/120	1	BRAKE	1190183	1190114	E0038363	E0038328 45-TOOTH	E0038372	E0038310 34-TOOTH	90800948	E0038328 45-TOOTH	E0034696	E0034960	E0038360
	2	LESS 24V POWER SUPPLY	E0038429 230V	E0038358									
			E0038451 460V	E0038329									
		WITH 24V POWER SUPPLY	1130023 230V	E0038358									
			1130045 460V	E0038329									
100/150	1	BRAKE	1190184	1190114	E0038331	E0034695 38-TOOTH	90800943	E0034695 38-TOOTH	90800948	E0033835 50-TOOTH	E0034696	E0034960	E0038360
	2	LESS 24V POWER SUPPLY	E0038430 230V	E0038358									
			E0038452 460V	E0038329									
		WITH 24V POWER SUPPLY	1130024 230V	E0038358									
			1130046 460V	E0038329									
	3	VFD READY	1190199	1190159	E0038365								E003E361
133/200	1	BRAKE	1190185	1190114	E0038331	E0038328 45-TOOTH	90800943	E0038310 34-TOOTH	90800948	E0038328 45-TOOTH	E0034696	E0034960	E0038360
	2	LESS 24V POWER SUPPLY	E0038431 230V	E0038358									
			E0038453 460V	E0038329									
		WITH 24V POWER SUPPLY	1130025 230V	E0038358									
			1130047 460V	E0038329									
	3	VFD READY	1190201	1190159	E0038365								E0038361
160/240	1	BRAKE	1190186	1190114	E0038331	E0034695 38-TOOTH	90800943	E0033833 36-TOOTH	90800948	E0033834 48-TOOTH	E0034696	E0034960	E0038360
	2	LESS 24V POWER SUPPLY	E0038432 230V	E0038358									
			E0038454 460V	E0038329									
		WITH 24V POWER SUPPLY	1130026 230V	E0038358									
			1130048 460V	E0038329									
	3	VFD READY	1190202	1190159	E0038368								E0038361

Drive-Train Reference Dwg #21S009

11.19 CRUZbelt 4 Induction Bed

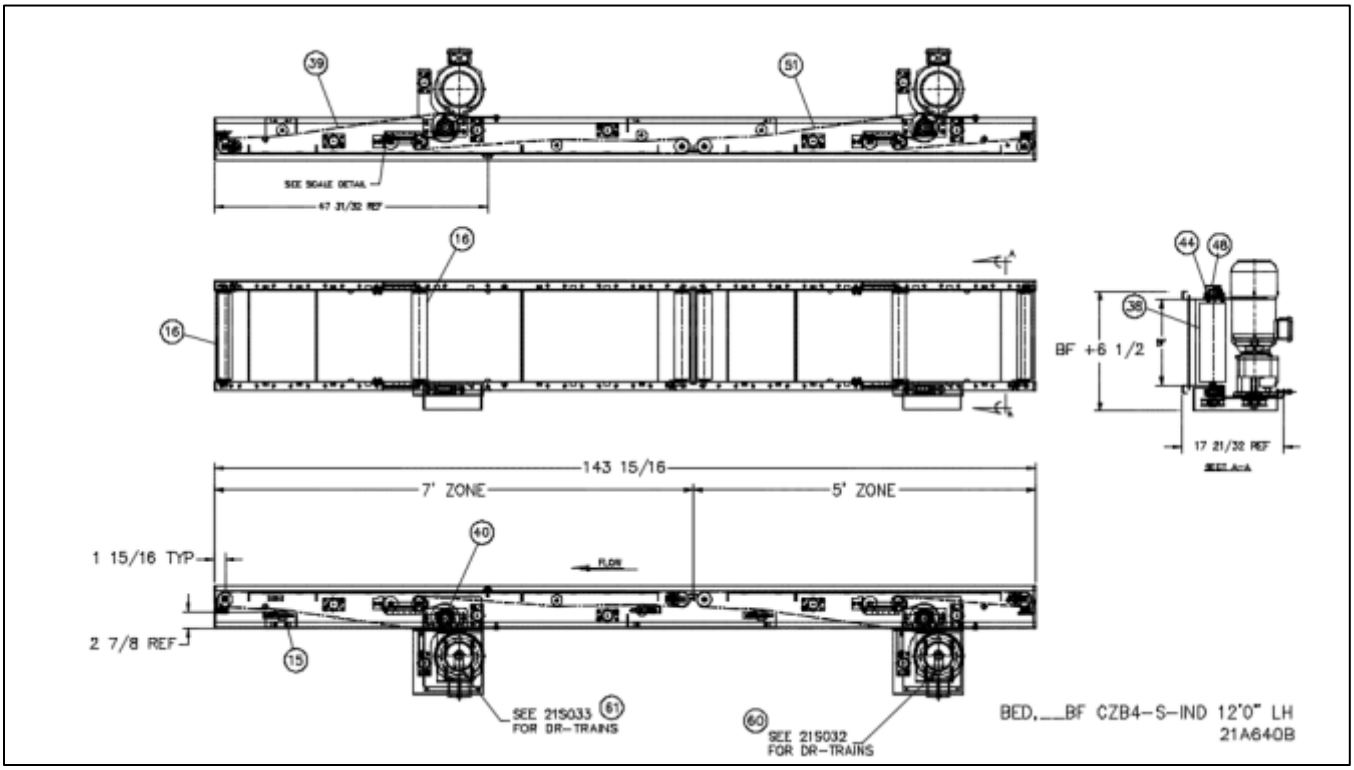

11.19.1 CRUZbelt 4 Single Induction Beds

REPLACEMENT PARTS FOR CRUZbelt 4 SINGLE INDUCTION BEDS					
		Widths & Part #s			
BALLOON	DESCRIPTION	16" BF	22" BF	28" BF	34" BF
60	DR-TRAIN,CZB INDUCT 5HP 330FPM	1174022			
61	DR-TRAIN,CZB INDUCT 5HP 410FPM	1173903			
60 & 61 / 04	BELT,POLYCHAIN 8MGT-720-36	1131521			
15	ROLLER, _ CZB 1.9 SNUBBER PRBG	E0009652	E0009653	E0009654	E0009655
16	PULLEY, _ CZB 2.5 DIA 1/4W	E0040390	E0040391	E0040392	E0040393
38	PULLEY,WLDMT CZB4 CDR	1139425	1151294	1147330	1152563
39	BELT,CZB _ 9/16" X 16'-0" INC	1152570	1152571	1147341	1152572
40	BRG,PILLOW BLOCK 1 1/4" BORE	1139427			
44	BRG,FLG 3BOLT X 1-1/4"B DODGE	1107696			
- - -	BRG,FLG 3BOLT X 1-1/4" BORE, LESS SET SCREWS,REF 1115235	E0034955			
48	COVER,BRG END EC-206-X	1184177			
51	BELT,CZB _ 9/16" X 12'-0" INC	1143775	1152568	1147585	1152569
					REF DWG#:21A640B

11.20 CRUZbelt 4 Induction Drive-Train

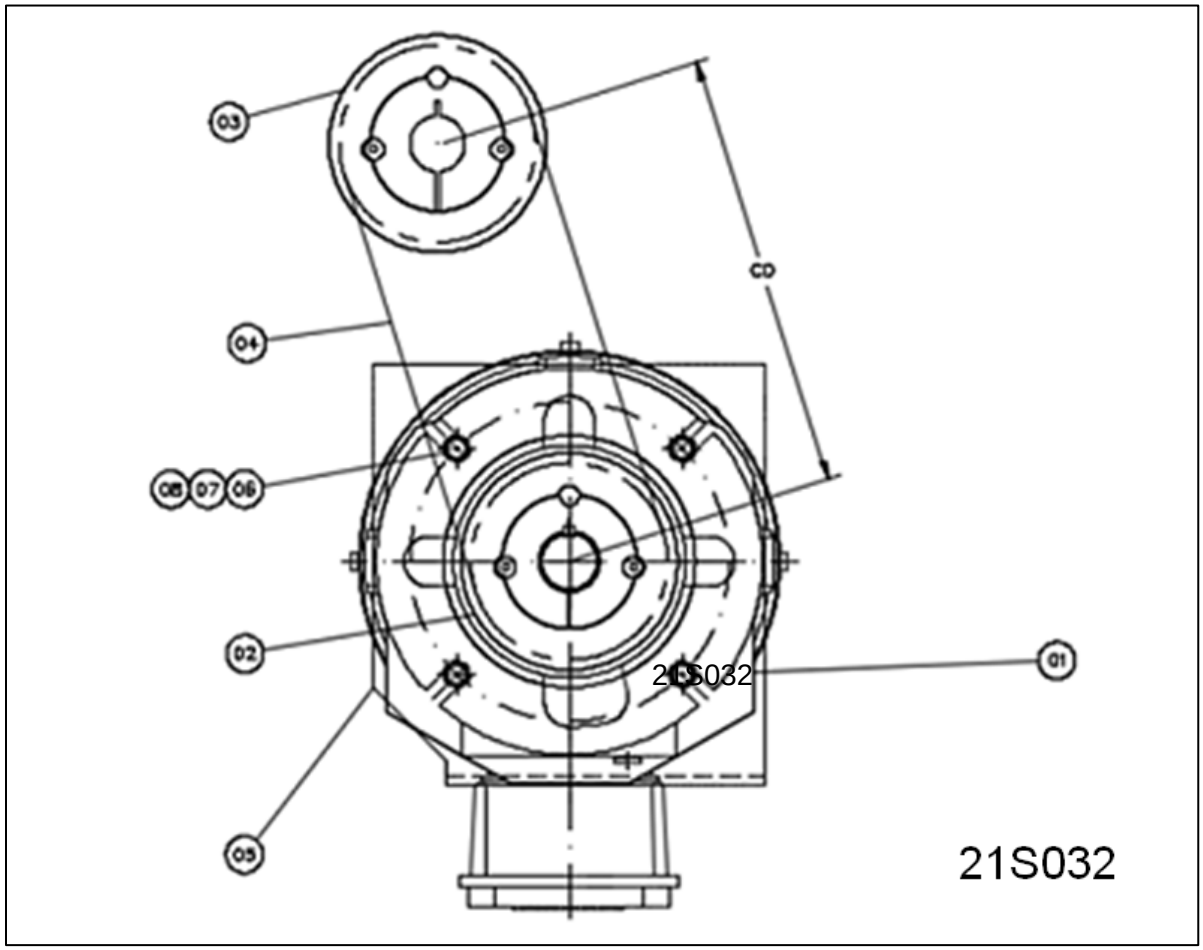

NOTE: DRIVE NOT TO EXCEED 500 LBS OF BELT PULL
MAXMIUM SPROCKET SIZE DRIVE: 8MX-53S-36
MAXMIUM SPROCKET SIZE DRIVEN: 8MX-42S-36

$$\text{FPM} = \text{RPM} \times \frac{\text{DR SPKT}}{\text{DRVN SPKT}} \times \frac{5 \times 3.1416}{12}$$

$$\text{BELT PULL} = \frac{33000 \times .98 \times .97 \times \text{HP}}{\text{FPM}}$$

NOTE: NOTE ALL GEARMOTORS USE “VL” BEARING OPTION (IE-SK372Z-VL-90SP/4)
ALL GEARMOTORS USE “TW” THERMOSTAT OPTION (IE-SK372.1-VL-90SP/4 TW)

ASSUMPTIONS:
GEARMOTOR EFFICIENCY = 97%
SPROCKET EFFICIENCY = 95%
LAGGED PULLEY = 5” DIA

11.20.1 CRUZbelt 4 Induction Drive-Train

REPLACEMENT PARTS FOR CZB 4 INDUCT DRIVE-TRAINS										
NOMINAL FPM	HP	SIDE	DRIVE TRAIN	1		2	2	3	3	4
			WITH ENCODER	GEAR MOTOR	REDUCER RPM	DRIVE SPROCKET	DRIVE BUSHING	DRIVE SPROCKET	DRIVEN BUSHING	BELT
410	5	RH	1174023	1174022	416	E0038981 8MX-33S-36	90800948 1610 1-1/4B	E0038983 8MX-41S-36	E0034696 2012 1-1/4" B	1131521 8MGT-720-36
		LH	1174891							
330	5	RH	1173899	1173903	336					
		LH	1174890							
Drive-Train Reference Dwg # 21S032B & 21S033B										

11.21 CRUZbelt 4 Center Drive (CDR)

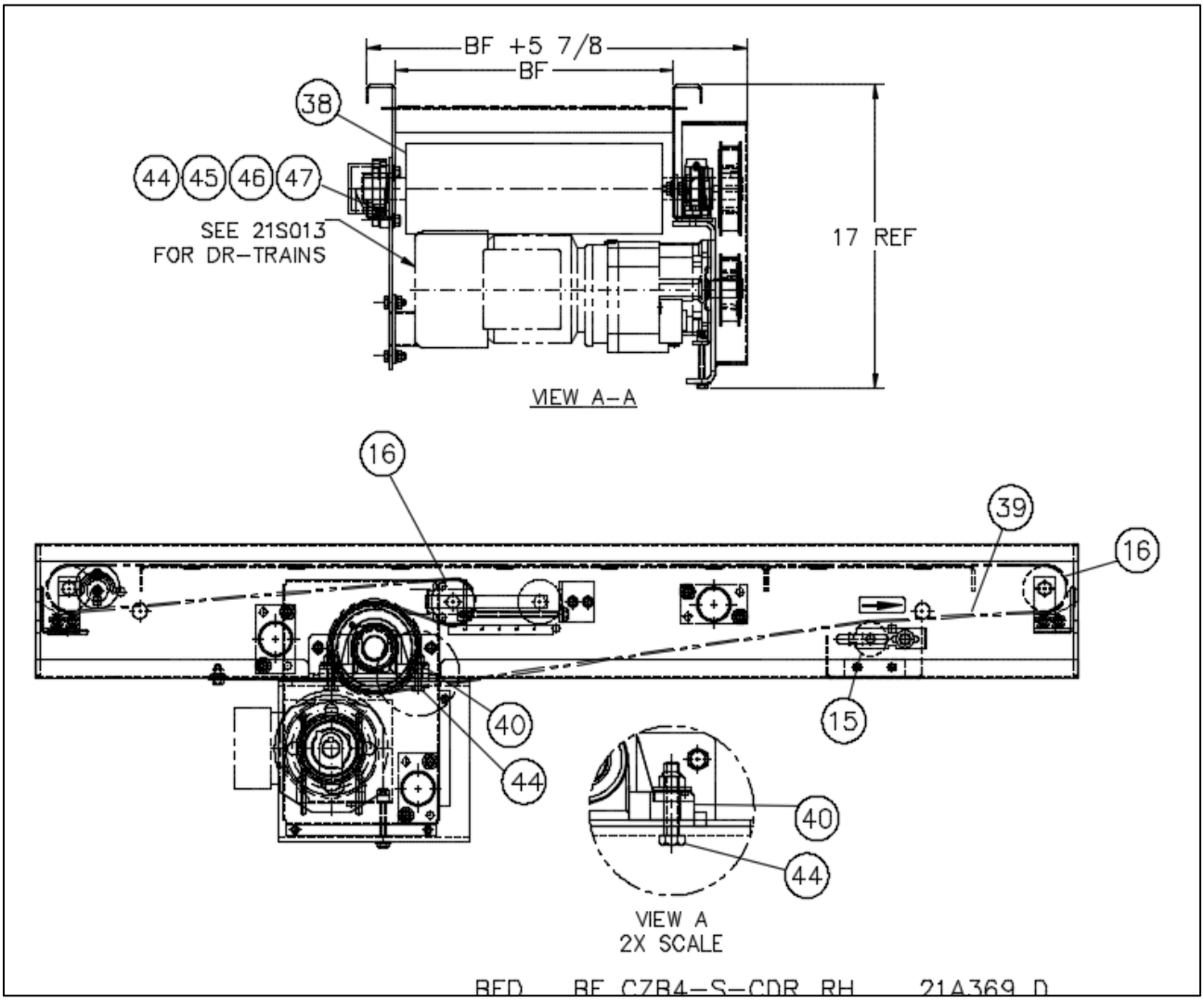

11.21.1 CRUZbelt 4 Center Drives

REPLACEMENT PARTS FOR CRUZBELT4 CENTER DRIVES					
		Widths & Part #s			
BALLOON	DESCRIPTION	16" BF	22" BF	28" BF	34" BF
15	ROLLER,_ _CZB 1.9 SNUBBER PRBG	E0009652	E0009653	E0009654	E0009655
16	PULLEY,_ _CZB 2.5 DIA 1/4W	E0040390	E0040391	E0040392	E0040393
38	PULLEY,WLDMT _ _BF CZB4 CDR URETHANE	1139425	1151294	1147330	1152563
39	BELT,CZB _ _-9/16" X __X_ INC BP290 QW LACED W/CERT	1170650	1170651	1170652	1170653
40	BRG,PILLOW BLOCK 1 1/4" BORE SQUEEZE LOCK	1139427			
44	BRG,FLG 3 BOLT X 1-1/4" BORE, CLAMP STYLE LF-DL-104S	1107696			
					REF DWG#:21A369D

11.22 CRUZbelt 4 CDR Drive-Train

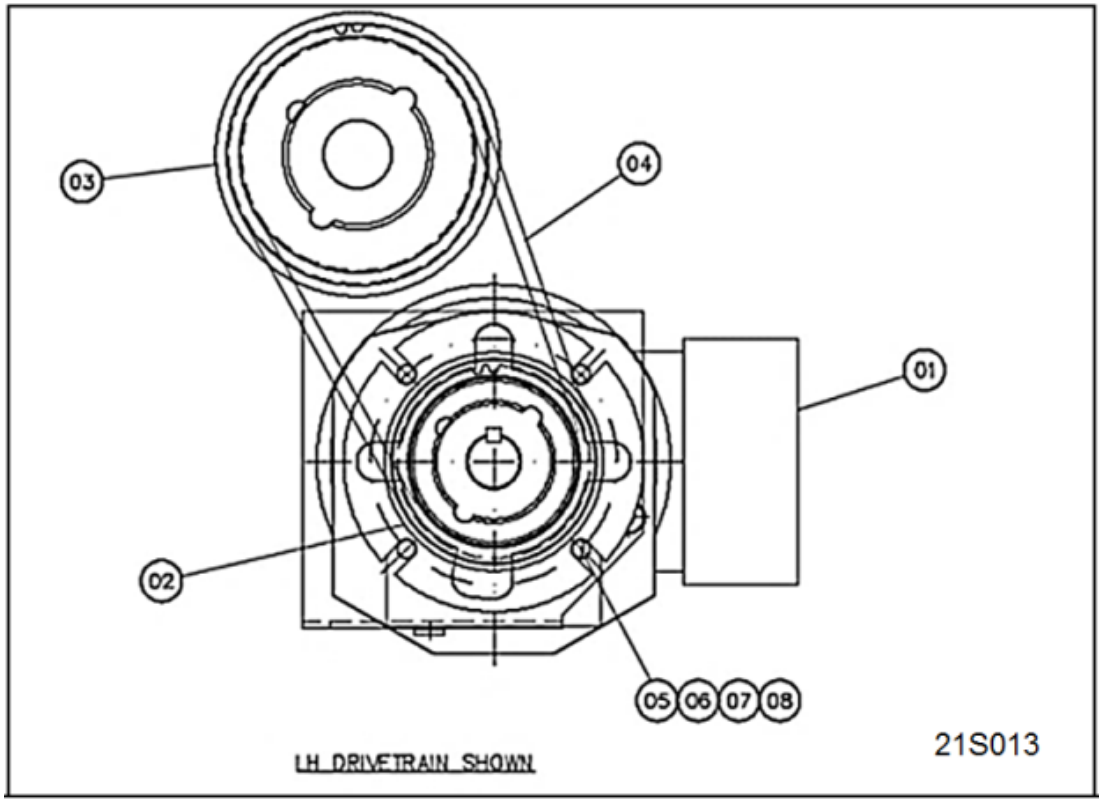

GEARMOTOR INFORMATION:
MOUNTING POSITION: M1
MOUNTING STYLE: FLANGE "F" (140MM)
HEAVY DUTY OUTPUT BEARING OPTIONAL: VL
NOTE: ALL GEARMOTORS USE "VL" BEARING OPTION (IE-SK372Z-VL-90S/4)
POSITION OF BRAKE HAND RELEASE LEVER: POSITION 1 W/TERMINAL BOX POSITION 1
POSITION 3 / W TERMINAL BOX POSITION 3

$$\text{BELT PULL} = \frac{33000 \times .98 \times .97 \times \text{HP}}{\text{FPM}}$$

$$\text{FPM} = \text{RPM} \times \frac{\text{DR SPKT}}{\text{DRVN SPKT}} \times \frac{5 \times 3.1416}{12}$$

ASSUMPTIONS:
GEARMOTOR EFFICIENCY = 97%
SPROCKET EFFICIENCY = 95%
LAGGED PULLEY = 5" DIA
MAXIMUM SPROCKET SIZE: 8MX-48S-21
NOTE: DRIVE NOT TO EXCEED 250 LBS OF BELT PULL.

11.22.1 CRUZbelt 4 CDR Drive-Trains

REPLACEMENT PART NUMBERS FOR CZB4-CDR TIMING BELT & DRIVE TRAINS											
FPM	HP	RH DRIVE TRAIN	LH DRIVE TRAIN	BRAKE OPTION	1 RH GEAR MOTOR	1 LH GEAR MOTOR	2 DRIVE PULLEY	2 DRIVE BUSHING	3 DRIVEN PULLEY	3 DRIVEN BUSHING	4 DRIVE BELT
90	1.0	1187126	1187119		1187135	1187130	D0603454 8MX-38S-21	90800942 1610 1" BORE	1139655 8MX-45S-21	E0034696 2012 1-1/4" BORE	D0503822 8MGT-720-21 GT2
		1187128	1187121	BRAKE	1187137	1187132					
105	1.0	1187127	1187120		1187136	1187131	1139652 8MX-39S-21				
		1187129	1187123	BRAKE	1187138	1187133					
120	1.0	1157021	1139659		1170436	1139571	1139653 8MX-41S-21	90800919 2012 1" BORE			
		1157031	1139672	BRAKE	1162105	1139643					
135	1.0	1157022	1139660		1174325	1139572					
		1157032	1139673	BRAKE	1173329	1139644					
150	1.5	1157023	1139661		1157005	1139573					
		1157033	1139674	BRAKE	1172622	1139646					
180	1.5	1157024	1139662		1160997	1139574			1139654 8MX-42S-21		
		1157034	1139675	BRAKE	1159520	1139647					
210	2	1157025	1139663		1169021	1139575	1139653 8MX-41S-21		1139655 8MX-45S-21		
		1157035	1139676	BRAKE	PENDING	1139648					
240	2	1157026	1139664		1157336	1139576					
		1157036	1139677	BRAKE	1182372	1139649					
280	3	1157027	1139667		1157027	1139577	1139652 8MX-39S-21	90800942 1610 1" BORE			
		1157037	1139678	BRAKE	1182491	1139650					
300	3	1157028	1139668		1183473	1139578	D0503820 8MX-40S-21	90800919 2012 1" BORE			
		1157038	1139679	BRAKE	PENDING	1139651					
Drive-Train Reference Dwg #21S013 G											

11.23 CRUZbelt 4 End Drive

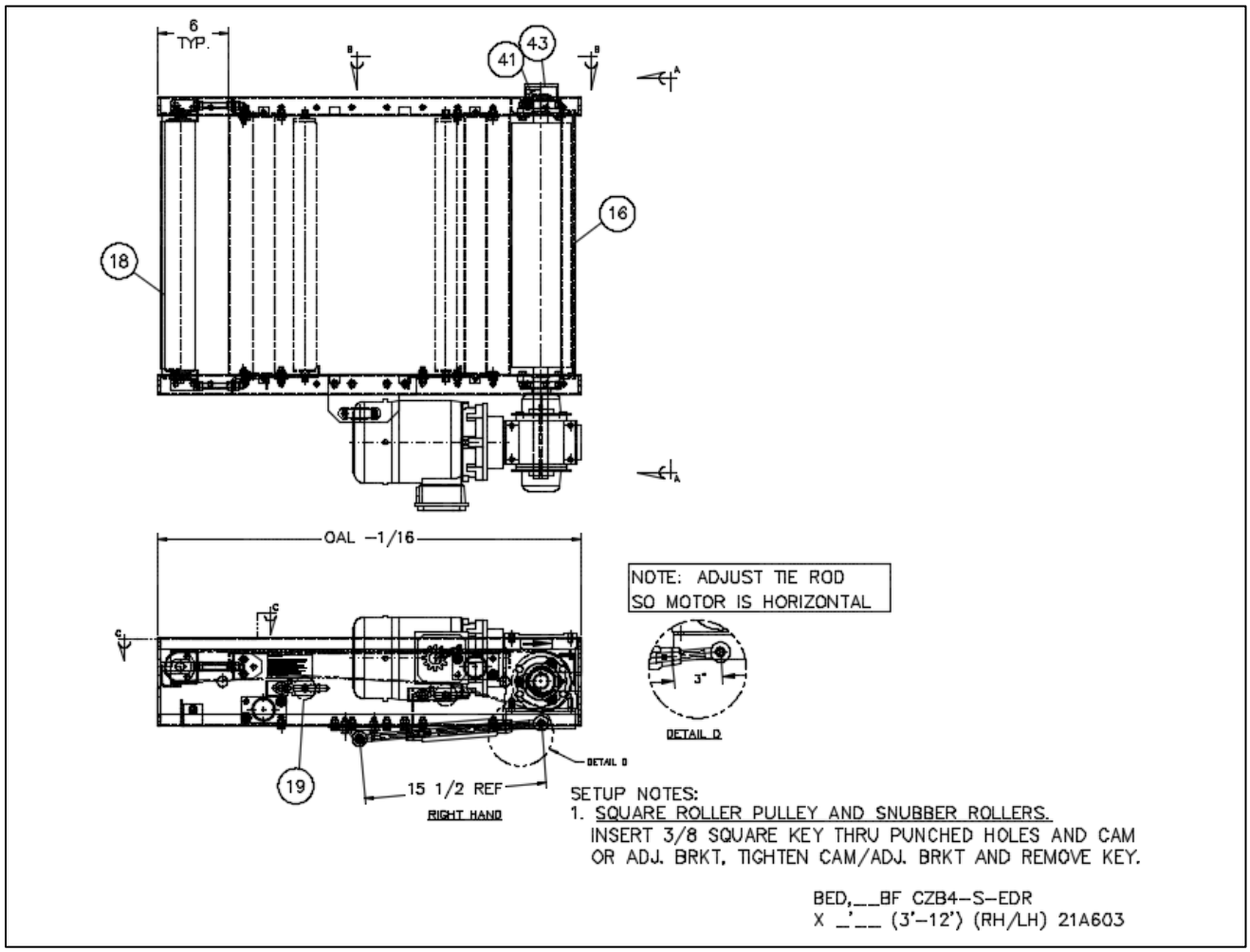

11.23.1 CRUZbelt 4 Slider Bed End Drive & Drive Train

REPLACEMENT PARTS FOR CRUZbelt4 END DRIVE BED (RH & LH)						
BALLOON	**DESCRIPTION**	**Bed Length**	**Widths & Part #s**			
			16" BF	**22" BF**	**28" BF**	**34" BF**
16	PULLEY, WLDMT _ _CZB 4.5 DIA EDR	3'-12'	E0038892	E0038893	E0038894	E0038895
18	PULLEY, _ _ CZB 2.5 DIA 1/4W		E0040390	E0040391	E0040392	E0040393
19	ROLLER,_ _CZB 1.9 SNUBBER PRBG		E0009652	E0009653	E0009654	E0009655
41	BRG, FLG 3 BOLT X 1-1/4" BORE DODGE		1107696			
43	COVER,BRG END EC-206-X (END CAP)		1184177			
	BELT,CZB _ 9 /16 X 6'-1.5" INC	3'	1167782	1167783	1167784	1167785
	BELT,CZB _ 9 / 16 X 8'-1.4" INC	4'	1167786	1167787	1167788	1167789
	BELT,CZB _ 9 / 16 X 10'-1.3" INC	5'	1167790	1167791	1167792	1167793
	BELT,CZB _ 9 / 16 X 12'-1.2" INC	6'	1167794	1167795	1167796	1167797
	BELT,CZB _ 9 / 16 X 14'-1.1" INC	7'	1167798	1167799	1167800	1167801
	BELT,CZB _ 9 / 16 X 16'-0.9" INC	8'	1167802	1167803	1167804	1167805
	BELT,CZB _ 9 / 16 X 18'-0.8" INC	9'	1167806	1167807	1167808	1167809
	BELT,CZB _ 9 / 16 X 20'-0.7" INC	10'	1167810	1167811	1167812	1167813
	BELT,CZB _ 9 / 16 X 22'-0.6" INC	11'	1167814	1167815	1167816	1167817
	BELT,CZB _ 9 / 16 X 24'-0.5" INC	12'	1167818	1167819	1167820	1167821
REF DWG:21A603						

11.23.2 CRUZbelt 4 Slider End Drive & Drive Train

REPLACEMENT PART NUMBERS FOR CZB4-EDR DRIVE TRAIN ITEM #s								
DRIVE TRAIN ITEM #s / GEARMOTOR PART #s FOR CRUZBELT 4 END DRIVES								
BALLOON#		40	40	2	2	1	1	
FPM	SIDE	DRIVE TRAIN PN	BRAKE OPTION	MOTOR PN	MOTOR HP	REDUCER PN	RATIO / HP MTR FRAME	BELT PULL
*38	--	1192976	---	1192973	.5	E0038752	60:1, .5HP 56/20H	700
	LH	1192987	BRAKE	1192975	.5	E0038752	60:1, .5HP 56/20H	
	RH	1192983	BRAKE	1192974	.5	E0038752	60:1, .5HP 56/20H	
*45	--	1192977	---	1192973	.75	E0039000	50:1, .5HP 56/20H	583
	LH	1192990	BRAKE	1192353	.75	E0038419	40:1, .75HP 56/20H	
	RH	1192984	BRAKE	1192974	.75	E0039000	50:1, .5HP 56/20H	
*57	--	1192979	---	1190384	1	E0038491	40:1, .75HP 56/20H	466
	LH	1192991	BRAKE	1192353	1	E0038705	30:1, .75HP 56/20H	
	RH	1192985	BRAKE	1192352	1	E0038491	40:1, .75HP 56/20H	
*76	--	1192981	---	1190384	1	E0038705	30:1, .75HP 56/20H	350
	LH	1192989	BRAKE	1192975	1	E0039000	50:1, .5HP 56/20H	
	RH	1192986	BRAKE	1192352	1	E0038705	30:1, .75HP 56/20H	
91	--	1187672	---	1187037	1	E0038710	25:1, 1HP 140/20H	291
	LH	1190104	BRAKE	1190117				
	RH	1190098	BRAKE	1190114				
114	--	1187673	---	1187037	1	E0038707	20:1, 1HP 140/20H	233
	LH	1190105	BRAKE	1190117				
	RH	1190099		1190114				
127	--	1187674	---	1187037	1	E0038706	18:1, 1HP 140/20H	210
	LH	1190106	BRAKE	1190117				
	RH	1190100		1190114				
152	--	1187675	---	1187038	1.5	E0038711	15:1, 1.5HP 140/20H	261
	LH	1190107	BRAKE	1190119				
	RH	1190101		1190118				
180	--	1187678	---	1187039	1.5	E0038708	12.7:1, 1.5HP 140/20H	221
	LH	1190108	BRAKE	1190119				
	RH	1190102		1190118				
229	--	1187679	---	1187039	2	E0038709	10:1, 2HP 140/20H	233
	LH	1190109	BRAKE	1190121				
	RH	1190103		1190120				
REF DWG#: 21A603D & 21A592D								
*** For normal; speeds of 38 thru 76 FPM, Use 0.50, 0.75-HP NORD STANDARD EFF. MOTORS.**								
On Brake motors, use 460VAC brake supply voltage that outputs 205VDC to the brake coil.								

11.24 CRUZbelt Strip Belt Spur

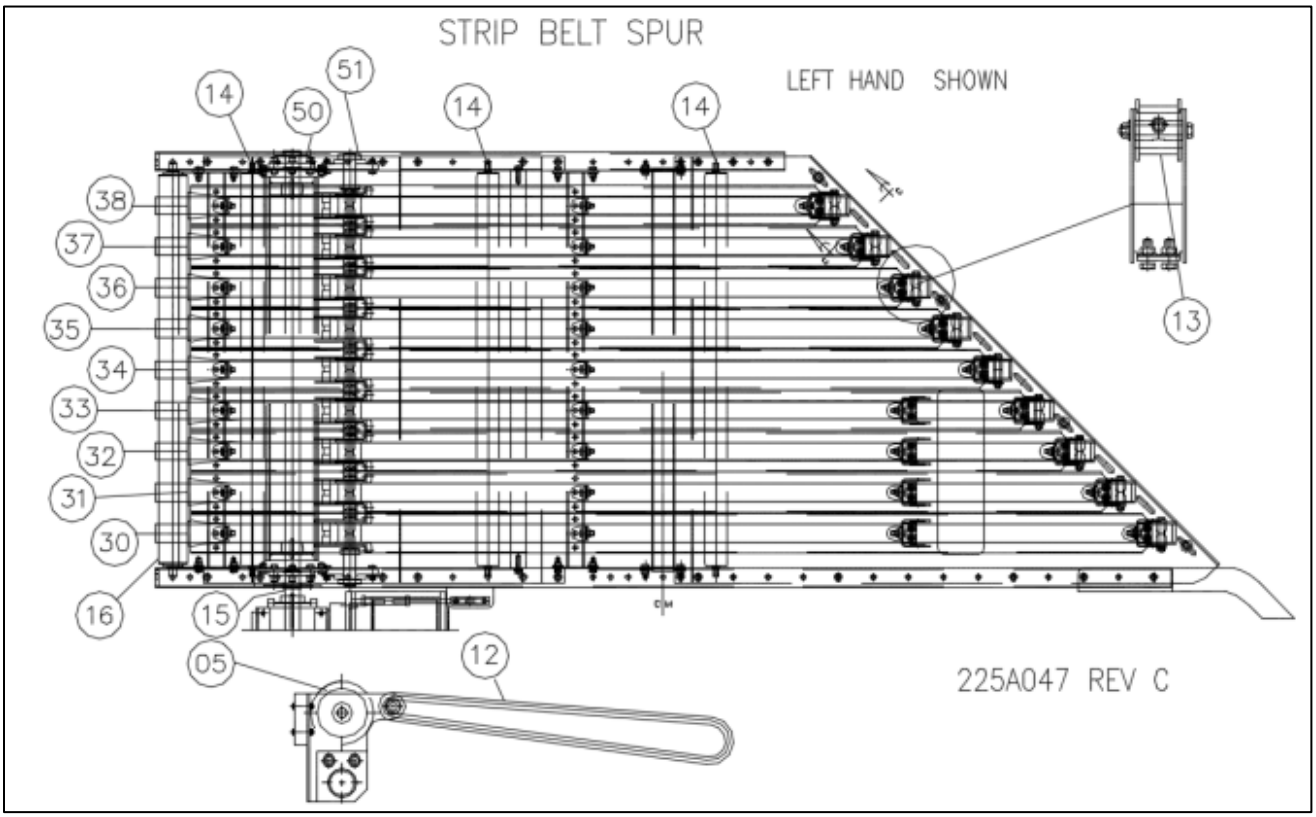

11.24.1 CRUZbelt Strip Belt Spur

REPLACEMENT PARTS CZB STRIP BELT SPUR					
BALLOON	DESCRIPTION	Widths & Part #s			
		16" BF	22" BF	28" BF	34" BF
6	BRG, R6 ZZ C3	90050111			
5	SHEAVE,ASY FENNER #FA2501, INCLUDES (2)FENNER CB 0003, MTG ADAPTERS	E0007309			
10	BUSHING,BRONZE 3/8 X 5/8 X 3/4	E0033909			
12	ORING,83A 5/16 X 25"	1111445			
13	SHEAVE,ASY FLAT EFSON FA2501	E007309	E007309	E007309	E0033908
14	ROLLER,_ _CZB 1.9 SNUBBER PRBG	E0009652	E0009653	E0009654	E0009655
15	PULLEY,TAPERLOCK _ _CZB 4"DIA	1126915	1126914	1111480	1120530
16	ROLLER,SNUB _ _BF 11/16AXLE	18218001	18224001	18230001	18236001
30	BELT,RGH TOP 1-1/2" W X 198" LACED	E0033899			
31	BELT,RGH TOP 1-1/2" W X 191" LACED	E0033900			
32	BELT,RGH TOP 1-1/2" W X 184" LACED	E0033901			
33	BELT,RGH TOP 1-1/2" W X 177" LACED	E0033902			
34	BELT,RGH TOP 1-1/2" W X 170" LACED	- - - - -	E0033903		
35	BELT,RGH TOP 1-1/2" W X 163" LACED	- - - - -	E0033904		
36	BELT,RGH TOP 1-1/2" W X 156" LACED	- - - - -	- - - - -	E0033905	
37	BELT,RGH TOP 1-1/2" W X 149" LACED	- - - - -	- - - - -	E0033906	
38	BELT,RGH TOP 1-1/2" W X 142" LACED	- - - - -	- - - - -	- - - - -	E0033907
50	BRG,FLG 3BOLT X 1-1/4" BORE DODGE	1107696			
-----	BRG,2BOLT FLG X 1" BORE BRG, LESS SET SCREWS,REF 1115244	90050202			
					Bed Reference Dwg:225A047C

11.25 CRUZbelt Spur Drive Train

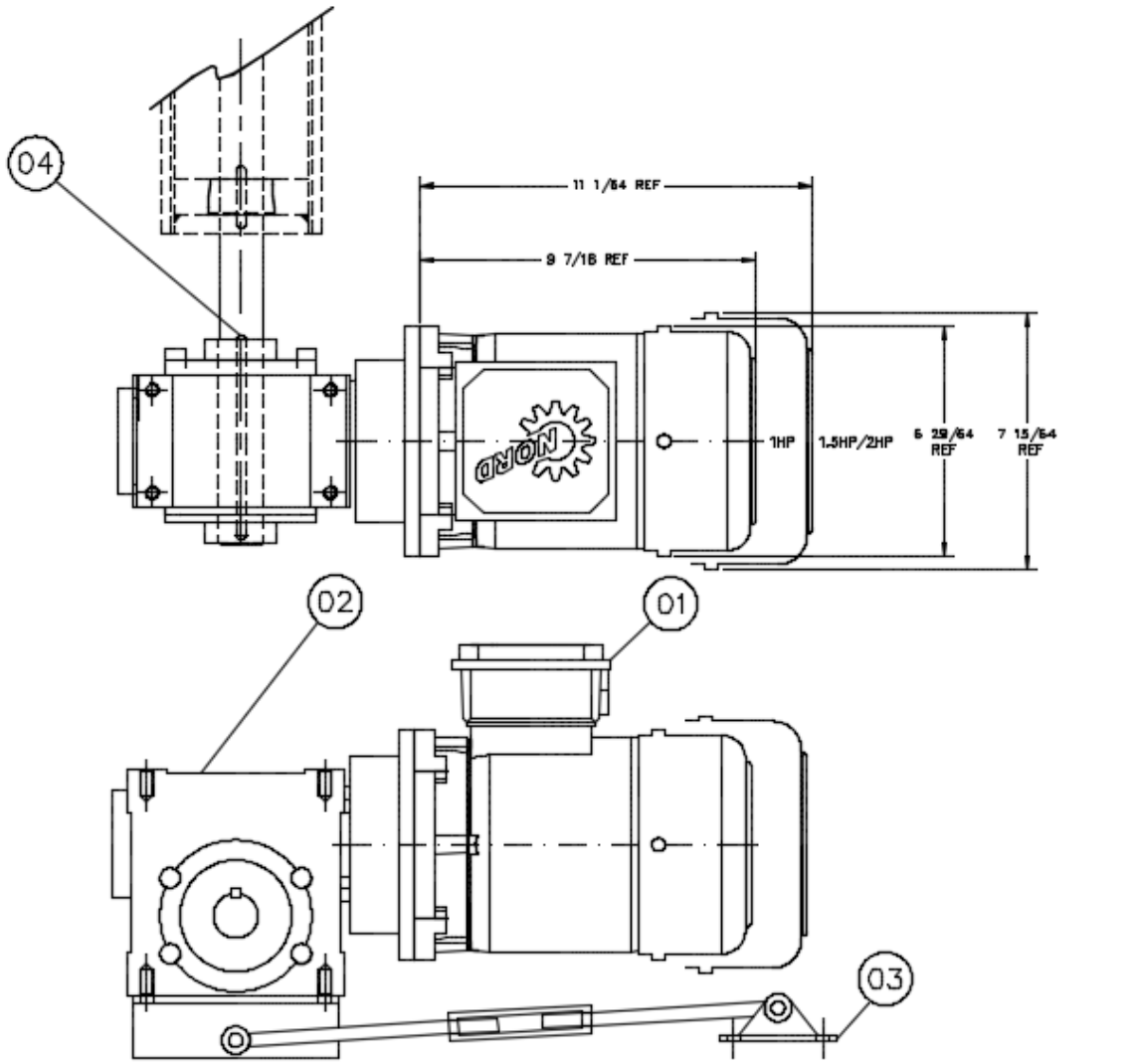

FPM= RPM X $\frac{4.5 \times 3.1416}{12}$

BELT PULL= $\frac{33000 \times .80 \times HP}{FPM}$

WHEN USING A BRAKE MOTOR, USE 460VAC BRAKE SUPPLY VOLTAGE THAT OUTPUTS 205VDC TO THE BRAKE COIL.

MOTOR TERMINAL BOX LOCATION FOR DRIVE:
TERMINAL BOX @ POSITION 3 W/CABLE ENTRY II

DR-TRAIN, CZB STRIP BELT
225D102 C

11.25.1 Strip Belt Spur Drive Train

REPLACEMENT PARTS CZB STRIP BELT SPUR DRIVE TRAIN								
		Balloon# 1	1		2			
NOMINAL FPM	DR-TRAIN P/N PROODUCT	DR-TRAIN P/N PHANTOM	MOTOR P/N	MOTOR HP	REDUCER P/N	REDUCER SIZE/RPM	ACTUAL FPM	BELT PULL
103	1190137	1190138	1187037	1	E0038707	20Q20H14 / 87	101.9	259
137	1190139	1190140	1187037	1	E0038711	20Q15H14 / 115	135.9	194
206	1190141	1190142	1187037	1	E0038709	20Q10H14 / 173	203.8	130
206	1190143	1190144	1187038	1.5	E0038709	20Q10H14 / 174	205	193
275	1190145	1190153	1187039	2	1156109	20Q07H14 / 247	291.2	181
410	1190155	1190156	1187039	2	1153140	20Q05H14 / 346	407.6	130
REF DWG#:225D102								

Works Cited

ANSI. (2013-2014). *American National Standards Institute*. Retrieved 2014, from ANSI Standards Store: http://www.ansi.org/

ASME. (2014). *The American Society of Mechanical Engineers*. Retrieved 12 05, 2014, from https://www.asme.org/

CEMA. (2014). *Conveyor Equipment Manufacturers Association*. Retrieved 2014, from Conveyor Equipment Manufacturers Association: http://www.cemanet.org/

Nord. (2015). *Nord Drivesystems*. Retrieved from Nord Drivesystems: https://www.nord.com/cms/us/home-us.jsp

OSHA. (2014). *Occupational Safety & Health Administration*. Retrieved 2014, from OSHA QuickTakes: https://www.osha.gov/

General Information

Visit MHS Conveyor website at mhs-conveyor.com for maintenance videos and other application information.

MHS Conveyor Information

Mission

To meet or exceed all customer expectations by providing the highest quality products and services, on time, at exceptional value, in an environment which promotes safety and personal development.

MHS Conveyor

1300 E Mount Garfield Road

Norton Shores MI 49441-6097 USA

231.798.4547

Email: us-info@mhs-conveyor.com

Web Site: mhs-conveyor.com

Regional sales offices and authorized Business Partners located throughout the United States and Canada.

Licensees and Business Partners in Europe, South America, and Southeast Asia.